CONTENTS

Important Notes and Operating Safety Regulation:

Chapter 1 Linear Actuator LA Series User's Guide
1. Product Specification and Operation Environment..... 5
2. Installation Guide..... 7
3. Caution Notice..... 9

Chapter 2 LAK Series Controller User's Guide
1. Product Specification and Operation Environment..... 12
2. System Overview..... 18
3. Installation Guide..... 23
4. Basic Operation Guide..... 29
5. Caution Notice..... 31
6. LAKC-1 Over Current Protection Box..... 32

Chapter 3 Sealed Lead Acid Batteries User's Guide
1. Battery Specification..... 35
2. Battery Power Depletion Chart..... 35
3. Battery Charging Guide..... 36
4. Installation of Battery on Controller..... 36
5. Battery Notice..... 38

Chapter 4 LA Series Products Wiring & Installation
1. Linear Actuator Motor Wiring..... 39
2. Reed Switch Specification & Application Circuitry..... 41
3. PLC Examples..... 42
4. Positioning Feedback Device Wiring..... 43

Chapter 5 LAK\LAP Wiring & Installation
1. LAP1/LAP2 Wiring..... 52
2. LAP3 Wiring..... 54
3. LAP3N Wiring..... 56
4. LAP4/LAP4M/LAP4R Wiring..... 57
5. LAP4G Wiring..... 58
6. LAP4N/LAP4M/LAP4R Wiring..... 59
7. LAP5 Wiring..... 60
8. Connector Drawings..... 62

Chapter 6 Appendix
1. Label Description..... 64
2. IP rank Description..... 65

Chapter 7 Product use in Medical Bed..... 66

*The contents of this user`s manual are subject to change without notice. If you are experiencing any technical difficulties or do not understand the contents of this manual, please contact our technical representative or local distributors for assistance.

Important Notes:

1. Please carefully read this operation manual before using this product. We don't take responsibility for any damage, accident or injury possibly caused by those who didn't follow these notes to install.
2. Don't disassemble or reinstall this product yourself. Since this product is designed under structural operation, computer simulation or physical test, it can't be disassembled or reinstalled without specialist's permission. If there is any accident or damage caused by self disassembly or reinstallation, we will not take responsibility.
3. If the appearance is damaged before installing or using, please immediately contact us or an agent.
4. Ensure to read product label or performance specifications indicated by the delivery document before installing linear actuators.
5. Carefully read power supply indicated on the specification label of a control box before using this product. Moreover, confirm the supplied power complies with product requirement. If there is product damage or personnel injury caused by wrong supplied power, we will not take responsibility.
6. Don't use this product under an environment over the rating load. If there is any damage or injury, we will not take responsibility.
7. Don't use this product under an impact environment. If there is product damage, accident or injury, we will not take responsibility.
8. Don't handle this product yourself if faults occur. This product can be repaired by our qualified technicians only.
9. This appliance is not intended for use by persons (including children) with reduced physical, sensory or mental capabilities, or lack of experience and knowledge, unless they have been given supervision or instruction concerning use of the appliance by a person responsible for their safety.
10. Children should be supervised to ensure that they do not play with the appliance.

One-year guarantee is provided since the date this product delivered. For product damage caused by the improper operations (Please refer to notes and installations in this operation manual.) or natural disasters during this period, we will not take responsibility to replace and maintain them for free.

Operating Safety Regulation:

1. While operating an actuator, don't interrupt the motor operation to avoid failures in motor or mechanical structure.
2. Please follow the directions and use the nominal voltage of actuator motor with DC voltage. The supplied DC voltage can provide the maximum current at the maximum load.
3. If customers use power supplies and controllers themselves, please follow the current allowed for wire cross-section to install over current protectors (such as fuse), on the output end of power supplier or the input end of actuator power and use this over current signal to control actuators, which not only stop movement or disconnect power supply but also ensure the extension tube of an actuator at the limit position or under the overload operation can disconnect the power and provide appropriate control and protection.
4. Unless specially customized, the duty cycle of our actuator should be 10%. The duty cycle is defined to continuously operate 2 minutes and pause 18 minutes. If customers operate over duty cycle (10%), please install overheat detection and prevention devices (as a fan) and use this overheat detection signal to control actuators to stop movement or disconnect power supply according to control requirements.
5. If customers don't purchase limit switches, please install the limit switches at the stroke positions of the extension tube of an actuator yourself and combine that limiter for power failure on controllers and power suppliers to ensure the power can be disconnected when the extension tube of an actuator moves to the stroke and wire position.
6. The actuator is DC driven. When the two input wires of motor power are exchanged, the extension tube of the actuator will reversely move. Please use proper controllers and power suppliers while stop. Two input wires of motor power are short-circuited to provide auxiliary brake. Note that the power of actuator motor should be disconnected and then short-circuited to avoid short circuit on power supplier.
7. Don't operate up to the stroke limit if there are no limit switches and controllers have no overload protection.
8. Don't apply actuators over the maximum load indicated by the specifications.
9. If the actuator isn't water-proof, please follow the water-proof regulations.
10. Controller power: AC110V or AC220; the required input power is shown on the controller's specification tag.
11. Operating temperature: +5° C ~ +40° C (+41° F ~ +104° F).

12.Type of protection of applied parts against electric shock is BF.
13.The temperature of Products under storage and transmission is -10˚C~+50˚C.
14.The clean method of product：Alcohol（70%）.
15.The procedure of the broken product：Recycle by local rules.
16.The product should be installed in a safe place where is allowed to take off the plug easily in an emergency situation.
17.Cycle of inspection (every six months).
18.The hospital bed cleaning procedure must depend on actuator water-proof level while actuator has assembled with hospital bed.

WARNING：Do not modify this equipment without authorization of the manufacturer.
WARNING：If this equipment is modified, appropriate inspection and testing must be conducted to ensure continued safe use of the equipment.
WARNING: Read all warnings.
WARNING: Read this manual and follow it carefully before using the device.
WARNING: Remove the power supply cord when the unit is being moved to avoid damage to the power supply cord.
WARNING: Do not use the unit in the presence of flammable anesthetics or other flammable substances in combination with air, oxygen-enriched environment, or nitrous oxide.
WARNING: Keep children away from the device.
WARNING: Before cleaning, turn off the unit and disconnect the power supply cord from the AC power supply.
WARNING: Always ensure that the supply voltage meets the factory set voltage and frequency range, as provided on the equipment.

Chapter 1 Linear Actuator LA Series User's Guide

1. Product Specification

1.1 Standard Performance:

TYPE	Max. Push Force (N)	Max. Pull Force (N)	Max. Current (A)			Max Holding Force (N)	Speed (mm/s)		
			12VDC	24VDC					
LAM-1	4000	3000	12	6		4000	8-11		
LAM-2	2000	2000	12	6		1200	16-21		
LAM-1A	3000	3000	12	6		3000	8-11		
LAM3-1	6000	5000	12	6		5000	4-5.5		
LAM3-2	4000	4000	10	5		4000	5.5-7.5		
LAM3-3	3000	3000	8	4		3000	7-9		
LAM3-4	2000	2000	8	4		1500	11.5-14.5		
LAI-1	4000	4000	8	4		1200	6-9		
LAI-1A	4000	4000	9	5		3000	6-9		
LAS-1	1200	1200	6	2.5		800	8-12		
LAS-2	600	600	6	3		300	16-25		
LAS3-1	1200	1200	6	2.5		800	8-12		
LAS3-2	600	600	6	3		300	16-25		
LAS4-1	800	800	5	2.3		600	10-15		
LAS4-2	300	300	6	3.6		200	30-46		
LAN1-1	6000	5000	11	24VDC	24VDC(24Q)	5000	24VDC	12VDC	24VDC(24Q)
	5000(12V)	5000(12V)	11	4	6		2.7-5	3-6	5-7
LAN1-2	4000	4000	11	4	6	4000	5-7	4-8	7-9
LAN1-3	3000	3000	10	4	6	3000		5-10	9-11.5
LAN1-4	2000	2000			5.5	2000			12-17
LAN2-1A	6000			6		5000	4-6		
LAN2-2A	5000			6		5000	5-7.5		
LAN2-3A	3000			6		3000	9-14		
LAN3-1	10000	6000		24VDC	24VDC(24Q)		24VDC		24VDC(24Q)
				8.3	12	10000	5-8		8-11
LAN3-2	7000	6000		8	11	7000	7-9		9-13
LAN3-3	5000	5000		7	11	5000	9.5-12.5		13-18
LAN4-1	3500	3500	12	5		3500	3.5-7		

LAN4-2	3000	3000	12	5		3000		4.2-9	
LAN4-3	2000	2000	12	5		2000		7-13	
LAN4-4	1500	1500	12	5		1500		11-20	
LAN5-1	8000	4000		24VDC	24VDC(24Q)	6000		24VDC	24VDC(24Q)
				5	8			2-3.5	5-7
LAN5-2	6000	4000		4.5	8	24VDC	24VDC(24Q)	3-4.5	7-9
						5000	5000		
LAN5-3	4000	3000		4	6	4000	4000	4-5.5	9-11
LAN5-4	3000	2000		4	6	1500	1500	6-9	14-19
LAC3	2000	500		5		2000		8-12	

*The specification of LAH1 refers LAN1.

1.2. Input Voltage: 24VDC or 12 VDC; tolerance ±10%. The rated voltage of actuator is indicated in the label or enclosed document.

1.3. Rated Duty Cycle: 10%
Definition: 2mis work and 18min pause.

1.4. Protection Class: IP54 (if not specially indicated)

1.5. Operating Temperature: +5℃ ~ +40℃ (+41° F ~ 104° F)

1.6. Atmospheric Pressure 860~1060hpa(12.5~15.4psi).

1.7. Equipment not suitable for use in the presence of a flammable anesthetic mixture with air or with oxygen or nitrous oxide.

2. Installation Guide

2.1. Please ensure that the extension tube is in the "lowest position" before installing actuators.

2.1.1 The term "lowest position" in this user's guide refers to the position such that there is no further movement towards the DC motor while the actuator is powered on. (Please refer to the figure below.)

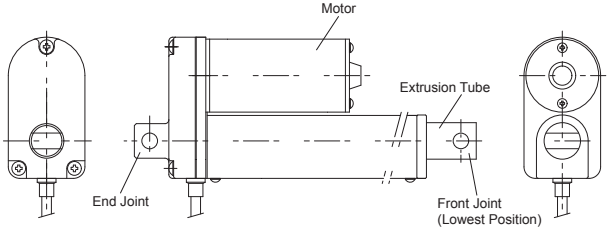

2.1.2 External limit switch: For installing an external limit switch, please ensure the extension tube is in the lowest position before installing an actuator (Please refer to the figure below.).

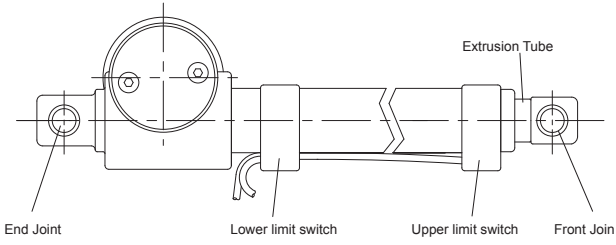

※ If an actuator doesn't have an external limit switch installed, you must install the stroke limiter on an actuator yourself. The distance between two actuator limit switches can't be longer than the stroke of the actuator. And then rotate the extension tube to adjust the length of an actuator, which can meet the minimum requirements to install actuators.

2.1.3 LAC3 Installation

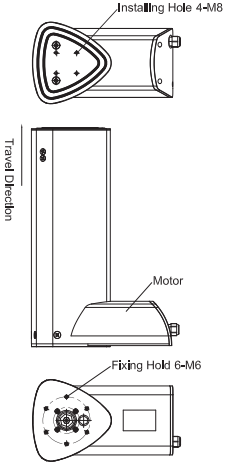

2.2.The front and end joints of the linear actuator should be mounted onto two fixed positions on the main chassis. Locations of these fixed positions should be chosen according to the stroke length of the linear actuator (Users must be cautious that the two-way movement of linear actuator must be smooth and within the stroke length after installed onto the fixed positions). Please ensure that no obstacle exists along the travel path of the actuator.

2.3.After the fixed positions have been selected, install the fixtures onto these selected positions of the main chassis. These fixtures are used to fix the front and end joints of linear actuator to the chassis.

2.4.Assemble the front and end joints of the linear actuator onto the two fixtures using fixture bolts. Please ensure that the fixture bolts are able to rotate freely after this step is completed. On the other hand, users should also make sure that the fixture bolts would not drop off either during operating or resting period.

2.5.The chassis of linear actuator should be fixed in the horizontal direction if it is going to be operated in this direction and likewise for vertical operation.

2.6.The operation of the linear actuator should be tested manually after the installation is completed. Users should make sure that:

- The travel distance of the actuator is matching the requirement of the structural design.

- The upper and lower limit switches are operated normally.
- The motor stops when the extension tube reaches upper and lower limit switch positions.

If the linear actuator fails to meet any of these conditions, please repeat steps 2.2 to 2.4 until the above mentioned clauses are met

2.7. The entire installation is finished only if steps 2.1 to 2.6 are executed successfully.

2.8. HIWIN Mikrosystem Corp. cannot take any responsibility for any injuries and/or damages caused as a result of not complying with the clauses of this section.

3. Note:

3.1. Don't use this product to make current transient inversion. If you try to backwardly move the present extension tube that forwardly moves, you must stop the motor and apply the reverse current to make backward movement. On the contrary, if you want the extension tube backward moved to forward, the way to supply current will be the same as mentioned above.

3.2. Don't use this product with a radial load (Please refer to figures and tables below.) because an actuator more appropriately applies to take the axial load. If there is product damage, accident or personal injury caused by improper load, we will not take any legal responsibility.

3.2.1 LA Series

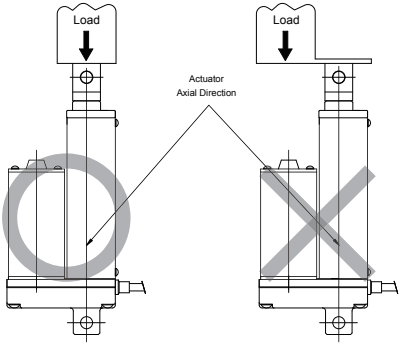

2.2 LAC Series

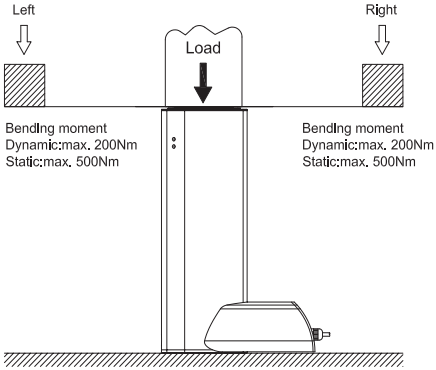

3.3. For fixing the extension tube in this actuator on one guding mechanism, please refer to the installation guide. If it is not fixed on any mechanism, it could idle.

4. Linear Actuator with Quick-Release User's Guide

4.1 LAN1、LAN2 Series:

4.1.1 Be sure the moving ambits of handle will not interfere with other mechanisms when assembling.

4.2.1 To avoid mistake touching, please put up warning notice on the mechanisms.

4.3.1 There must have load on the actuator to active quick-release.

4.4.1 The way to active quick-release is rotating the handle as the following drawing.

4.5.1 When the speed of quick-release is too fast, please free or reverse the handle immediately.

4.6.1 The quick-release function for LAN1 and LAN2 series can only be used in vertical pushing force condition, it may inactive in pulling force or slopping force.

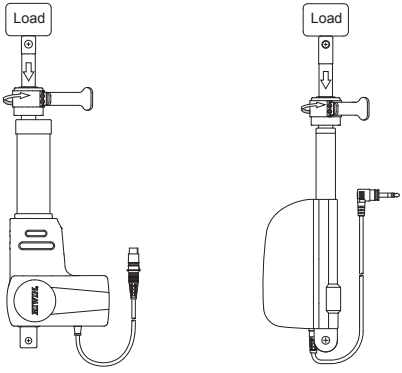

5. LAN3 Series:

5.1.To avoid mistake touching, please put up warning notice on the mechanisms or lifters.

5.2.The way to active quick-release is pulling the handle as the following drawing.

5.3.When the speed of quick-release is too fast, please adjust the handle extending length immediately; The screw beside the handle can adjust and limit the max. extending length of the handle.

5.4.The quick-release function for LAN3 series can only be used in vertical pushing force condition, it may inactive in pulling force or slopping force.

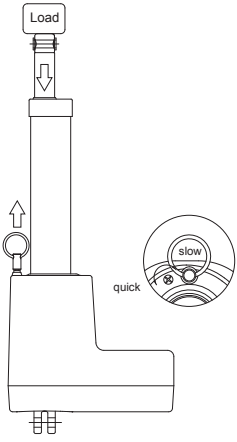

6. LAN5 Series:

6.1.Be sure the release cable is normal extended without any crooked when assembling, and the end of wire is certainty fixed on the mechanisms or hospital beds.

6.2.To avoid mistake touching, please put up warning notice on the mechanism or facilities.

6.3.The way to active quick-release is pulling the handle and let the wire extend as the following drawing.

6.4.Please lift the load temporary before active quick-release function, thus can pull the wire out and separate the clutch mechanism.

6.5.Be sure to keep the clutch separated and restore the load on actuator, and the load can extend and retract along axis direction.

6.6.The load on actuator cannot be the operating staff himself.

6.7.Be sure the release handle and clutch mechanism are restored by extending or retracting the actuator after quick-release function is actived.

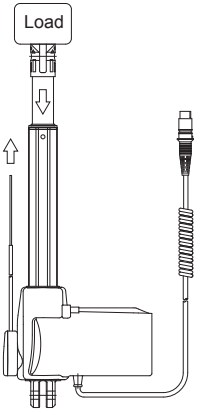

Chapter 2 LAK Series Controller User's Guide

1.Product Specification and Operation Environment

1. LAK2LR Series:

1.1 LAK2LR can combine uniaxial linear actuator with external limit switch.

1.2 The output power of a controller is 108VA (The output voltage is 24VDC.).

1.3 Fuse specification：2A/20mm(220/230VAC)，
3A/20mm(100/110VAC).

2. LAK2 Series:

2.1 LAK2 can combine uniaxial or bi-axial linear actuators. For the sake of safety, two actuators can't be operated simultaneously. Don't press the "△" key and "▽" key at the same time.

2.2 The output power of a controller is 108VA (The output voltage is 24VDC.).

2.3 LAK2 can be driven by DC (12VDC / 24VDC), which the output power depends on the maximum power of power supply.

2.4 Fuse specification：2A/20mm(220/230VAC)，
3A/20mm(100/110VAC)，
15A/20mm(12VAC).

3. LAK2B Series:

3.1 LAK2B can combine uniaxial or bi-axial linear actuators.

3.2 The output power of a LAK2B controller is 144VA (The output voltage is 24VDC.).

3.3 1.3Ah or 2.9Ah lead acid batteries can be selected, built-in auto charge circuit without an external charger.

3.4 Fuse specification：2A/20mm(220/230VAC)，
3A/20mm(100/110VAC)，
10A/20mm(Battery).

4. LAK2B Series:(UL):

4.1 LAK2B can combine uniaxial linear actuators.

4.2 The output power of a LAK2B controller is 72.5VA (The output voltage is 24VDC).

4.3 1.3Ah lead acid batteries can be selected, built-in auto charge circuit without an external charger.

4.4 Fuse specification：3A/20mm(120VAC)，
10A/20mm(Battery).

5. LAK2BN Series:

5.1 LAK2B can combine uniaxial or bi-axial linear actuators, and provide an intelligent controller as well as application software according to customer requirements.

5.2 The output power of a LAK2B controller is 144VA (The output voltage is 24VDC.).

5.3 1.3Ah or 2.9Ah lead acid batteries can be selected, built-in auto charge circuit without an external charger.

5.4 Fuse specification：2A/20mm(220/230VAC)，
3A/20mm(100/110VAC)，
10A/20mm(Battery).

6. LAK2D Series:

6.1 LAK2D can combine uniaxial or bi-axial linear actuators. For the sake of safety, two actuators can’ t be operated simultaneously. Don’ t press the “△” key and “▽” key at the same time.

6.2 The output power of a controller is 108VA (The output voltage is 24VDC.).

6.3 LAK2D is equipped with auto protector to avoid over current caused by overload or other abnormal situations; two 9V alkaline batteries can be added during temporary interruption to reduce the load.

6.4 LAK2D has no charge function, the battery can only afford the load to be declined urgently under a powerless state.

6.5 LAK2D can combine LAM3 to save the space and be easily installed (Please refer to the figure below.).

6.6 Fuse specification：2A/20mm(220/230VAC)，
3A/20mm(100/110VAC).

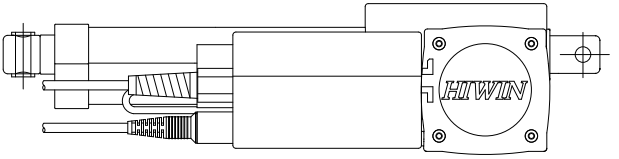

7. LAK2J Series:

7.1 LAK2J can combine uniaxial or bi-axial linear actuators.

7.2 A portable controller is designed in this product driven by two 12VDC lead acid batteries with 4.5Ah without built-in transformer.

7.3 The EMERGENCY button on a panel can disconnect the function of a controller to protect customers users.

7.4 Users can directly press the UP on DOWN key on a panel without a key box (The button can only be use to do the up and down control for the first axis).

7.5 Over current protection and slow start are provided to avoid misuse.

7.6 A LAKCH-A or LAKCH-B charger is required for charging, but AC-IN type are charged by connecting to 110V or 220V directly.(For the sake of safety, a controller can’ t be used in charging.).

7.7 In 30 seconds after stopping operation, it will automatically become energy-saving mode to increase the use time. The low-level buzz and LED power indication are provided as well.(In AC-IN type, the LED on the control panel are need to feed 110V or 2200V).

7.8 Fuse specification：15A/20mm.

8. LAK4 Series:

8.1 LAK4 can combine uniaxial to 3-axial linear actuators.

8.2 The output power of a controller is 72.5VA (The output voltage is 24VDC.).

8.3 LAK4N can combine LAN1 to save the space and be easily installed (Please refer to the figure below.).

8.4 Fuse specification：2A/20mm(220/230VAC)，
3A/20mm(100/110VAC).

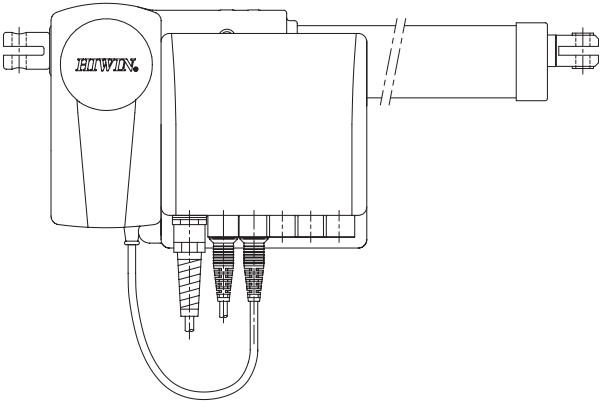

9. LAK4D Series:

9.1 LAK4D can combine uniaxial to 4-axial linear actuator.

9.2 The output power of a controller is 72.5VA (The output voltage is 24VDC).

9.3 A bolt is provided to avoid actuators cord and pluggable AC power cord from accidentally being removed as well as reduce the danger when using.

9.4 LAK4D can combine with HIWIN linear actuator LAN5, and has an anti-loose function to prevent an actuator from being removed; it is saving space and easy to install. (Please refer to the figure below)

9.5 Having external ground and LED power display.

9.6 Fuse specification：2A/20mm(220/230VAC)，
3A/20mm(100/110VAC).

9.7 The protective rank of anti-shock of this product is BF.

9.8 The sign on the case of this product indicates that here is a function for "Functional Ground" .(For the moment，we don' t provide the function).

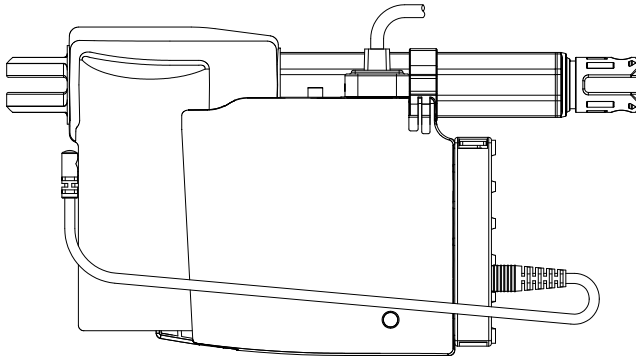

10. LAK4N Series:

10.1 Combine uniaxial to 6-axial linear actuators.

10.2 The output power of a controller is 216VA (The output voltage is 24VDC.).

10.3 A bolt is provided to avoid actuators and pluggable AC power cord accidentally being removed as well as reduce the danger when using.

10.4 1.3Ah or 2.9Ah lead acid batteries for LAK2B can be selected, built-in auto charge circuit without an external charger.

10.5 Externally connect the power supply to provide higher driving power.

10.6 Over current protection and slow start are provided to avoid customer misuse.

10.7 LAK4 can combine LAN1 to save the space and easily install (Please refer to the figure below.).

10.8 Fuse specification：4A/20mm(100/110/220/230VAC)，
15A/20mm(Battery).

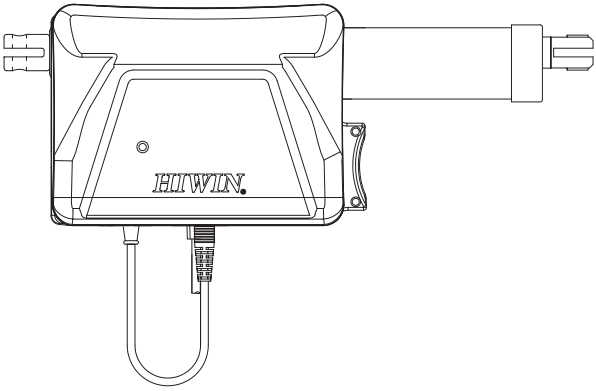

11. LAK6B Series:

11.1 Combine uniaxial to 6-axial actuators, and provide an intelligent controller as well as application software according to customer requirements.

11.2 The output power of a controller is 216VA (The output voltage is 24VDC.).

11.3 1.3Ah lead acid batteries can be selected, built-in auto charge circuit without an external charger.

11.4 Over current protection and slow start.

11.5 Energy-saving device and replaceable fuse with spare one on a socket.

11.6 External grounding and LED power indication.

11.7 Fuse specification：4A/20mm(100/110/220/230VAC).

2. System Overview

1. LAK2LR Series:

Taking LAM for example

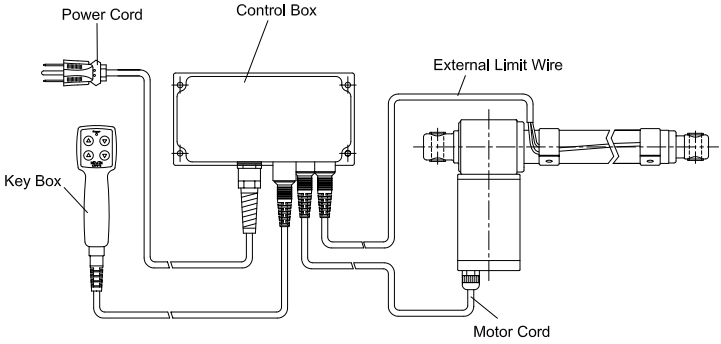

2. LAK2 Series:

Taking LAN2 for example

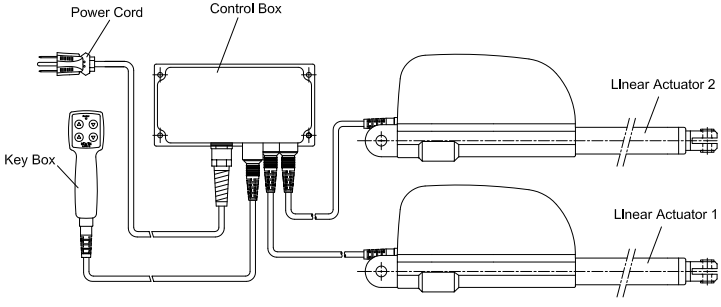

3. LAK2B/LAK2BN Series:

Taking LAN1/LAC3 for example

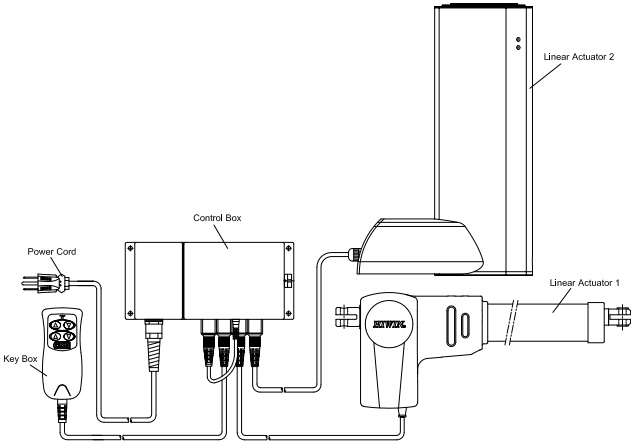

4. LAK2D Series:

Taking LAM3 and LAN1 for example

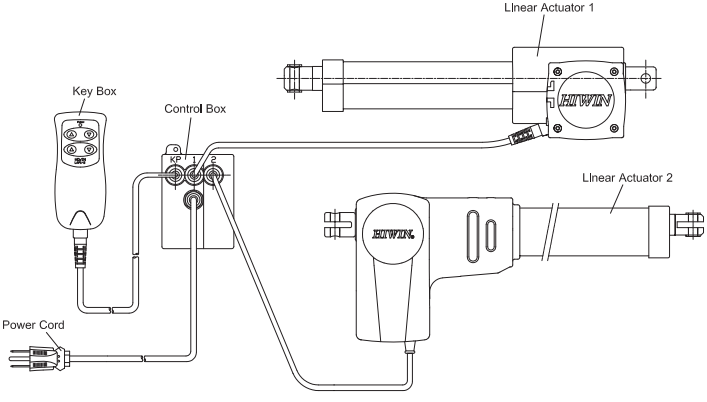

5. LAK2J (DC-IN)Series:

Taking LAN3 for example

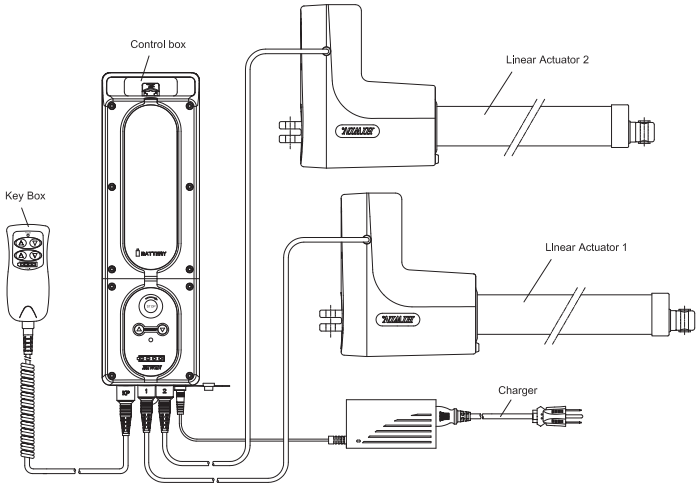

6. LAK2J (AC-IN)Series:

Taking LAN3 for example

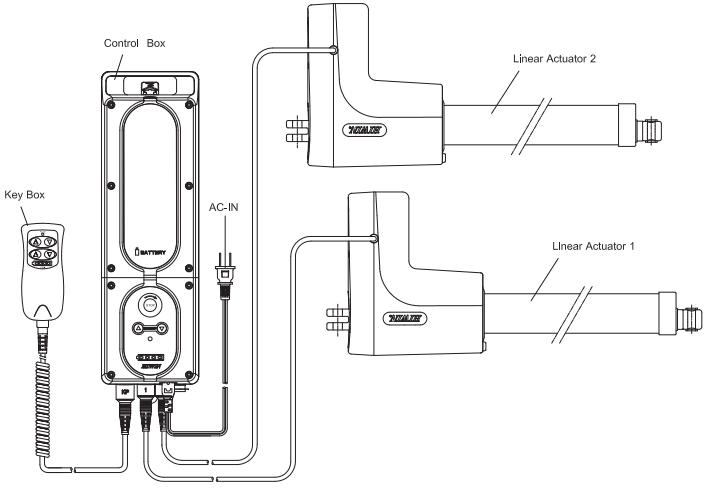

7. LAK4 Series:

Taking LAN1 for example

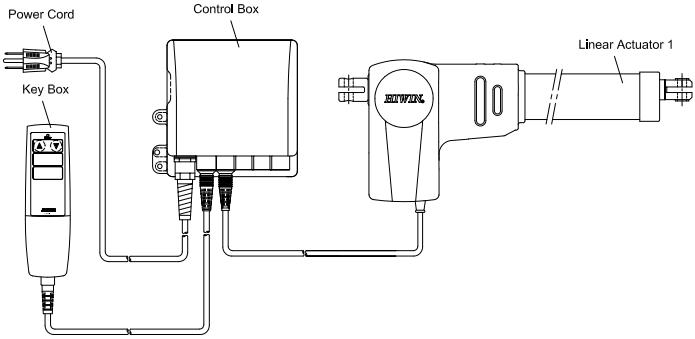

8. LAK4D Series:

Taking LAN5 for example

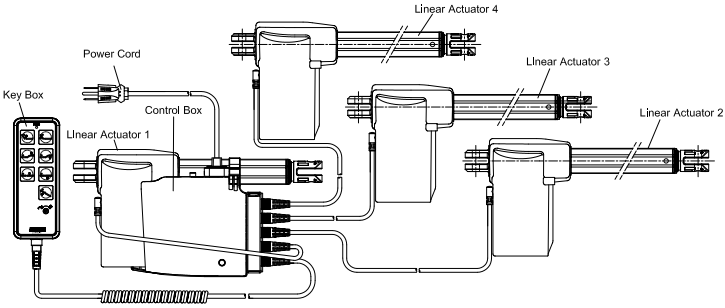

9. LAK4N Series:

Taking LAN1-LAC3 for example

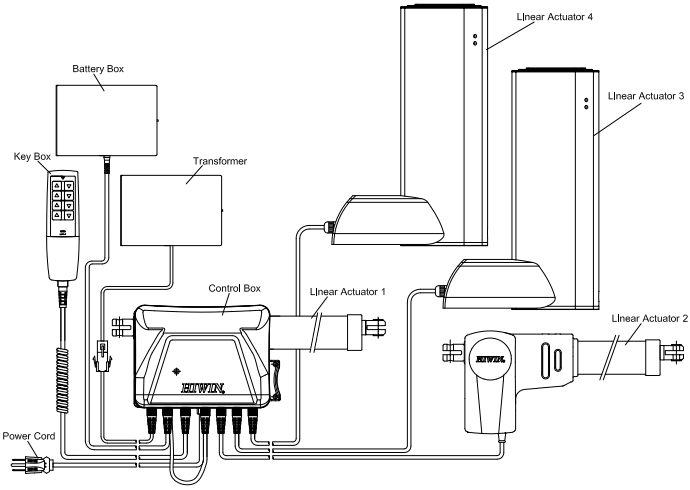

10. LAK6B Series:

Taking LAN1 and LAN2 for example

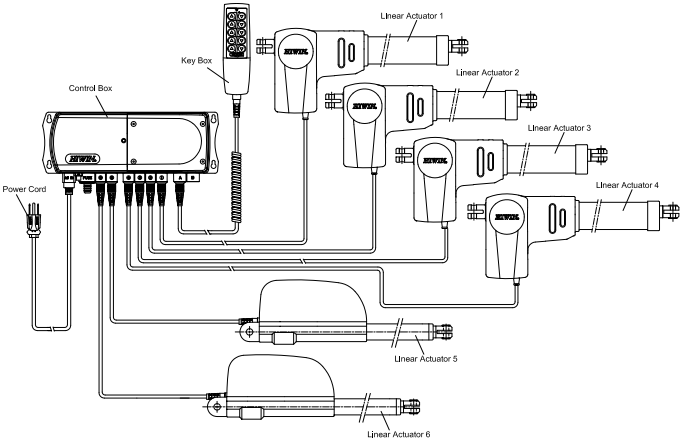

3. Installation Guide

Note: Don`t connect main power cord before completely connecting the whole system.

1. Installation of Linear Actuator and Controller Connector: When inserting an actuator connector to a controller chassis, please ensure a connector bolt aligns with a housing notch to insert. Push a connector into the bottom of a chassis until it is sure no gap between a connector and housing to ensure the IP class of the whole system (The installations of key box and controller are the same as above-mentioned.).

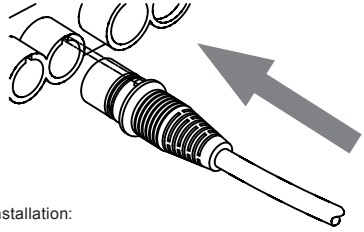

2. LAK2J Installation:

2.1 Step 1:

2.1.1 Before assembling, please ensure the EMERGENCY switch is pressed during the whole assembly.

2.1.2 Push the slider and uplift' the battery box (A), and loosen the screw (B)*2.

2.1.3 Lightly lift a cover of battery box so that can be separated from a support and control box (Fig. 1).

2.1.4 Install a support on the position, and fix on C point by screws (Fig. 2).

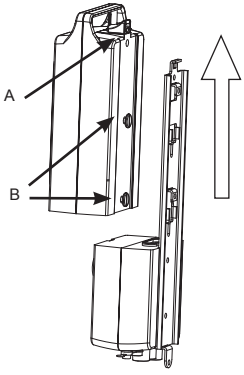

Fig. 1

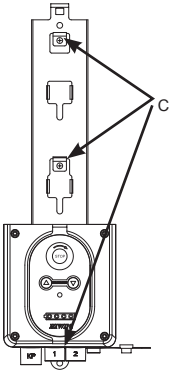

Fig. 2

2.2 Step 2:

2.2.1 Before reinstalling a cover of battery box on a support, please lightly tighten screw B (Fig. 3) so that a cover of battery box will not shake while embedding the whole device.

2.2.2 Lock up slider (A) , and ensure it is completely and firmly installed on the whole device (Fig. 4).

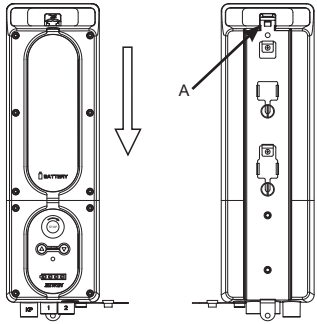

Fig. 3 Fig. 4

2.3 Step 3:

2.3.1 Finally, please turn the EMERGENCY switch clockwise so that a controller can start the operation.

3. LAM3 and LAK2D Installation:

Align a bolt on LAK2D controller with a notch on LAM3 to insert downward. There is one 3/16” *15 lock screw circled in the figure below to fix an actuator and controller.

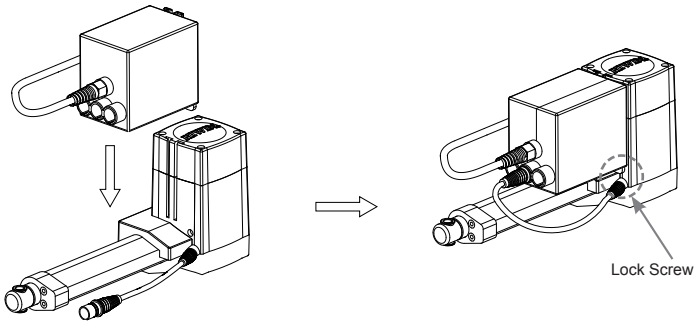

4.LAN5 and LAK4D Installation

4.1 Step 1: Align a bolt on LAK4D controller with a notch on LAN5 to insert downward(Fig. 1). There is a tube-bolt circled in the fig.2 to fix an actuator and controller.

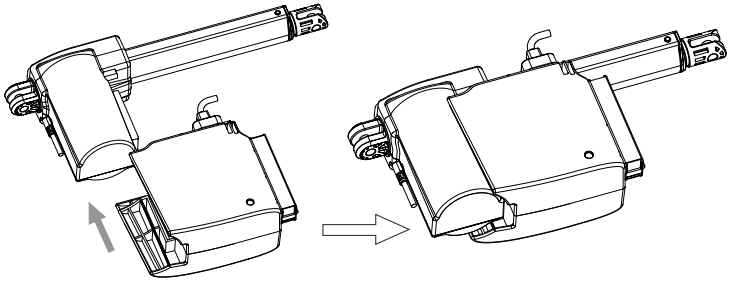

Fig. 1

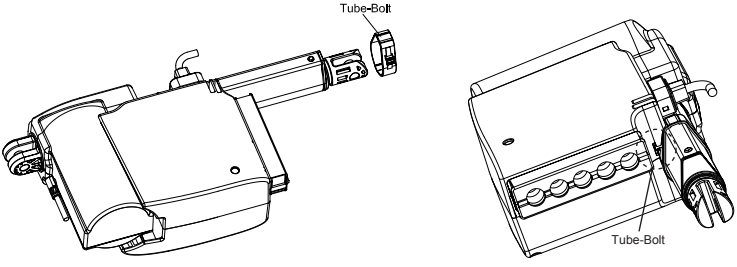

Fig. 2

4.2 Installation of LAK4D Fixer: After inserting connectors of an actuator and a key box，vertically insert back the fixer on LAK4D controller (A) , and then fasten the up fixer and down fixer on LAK4D controller (Fig. 3). Before inserting the main power cord，rotate out the locker (B) along the arrow direction to insert power cord (Fig. 3) and then pull it back (Fig. 3) along the arrow direction.

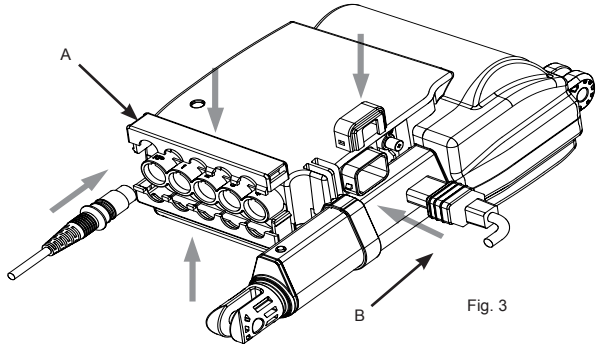

Fig. 3

4.3 Release of LAK4D Fixer:

4.3.1 One side of the fixer can be released (Fig. 5) by strongly pressing both sides of the fixer on LAK4D controller (Fig. 4).

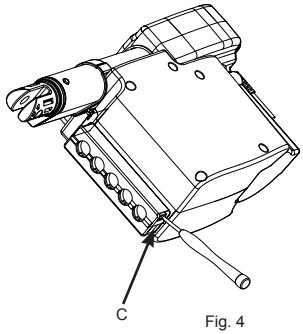

Fig. 4

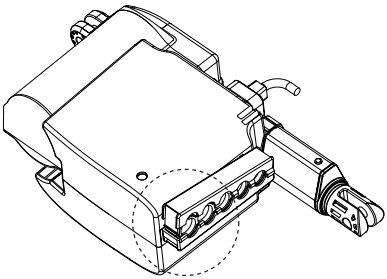

Fig. 5

4.3.2 Using a screwdriver to prize the bottom of power cord fixer on LAK4D controller (Fig. 6-D).

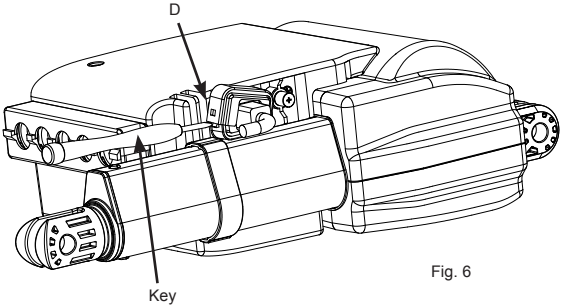

Fig. 6

5. LAN1 and LAK4N Installation: Align a bolt on LAK4N controller with LAN1 notch to insert downward(Fig. 1). There is one 3/16” *20 lock screw circled in Fig.2 to fix an actuator and controller.

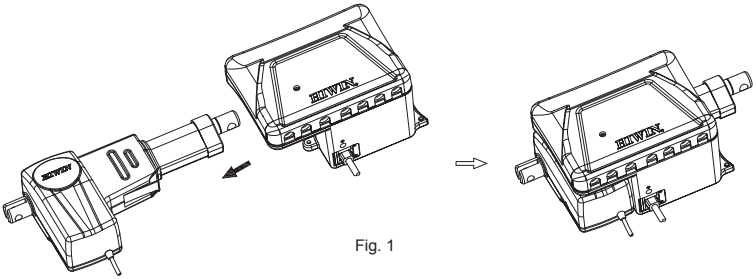

Fig. 1

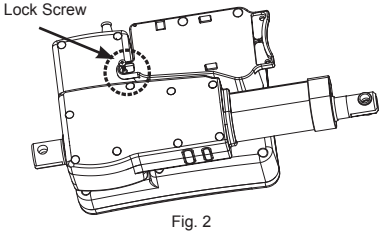

Fig. 2

6. Installation of LAK4N Fixer: Vertically and upwardly remove a fixer (A) from LAK4N controller. After inserting connectors of an actuator and key box, vertically insert back a fixer (Fig. 3) along the arrow direction. Before inserting main power cord, rotate out the locker (B) along the arrow direction to insert power cord (Fig. 1) and then pull it back (Fig. 4) along the arrow direction.

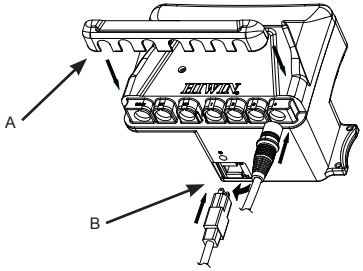

Fig. 3

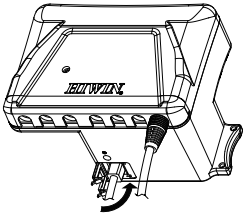

Fig. 4

7. Installation of LAFS Pedal Switch: The pedal switch can directly place on the ground to use. Don’t stamp on two pedals simultaneously. In addition, there is a powerful magnet attached on the back of pedal switch. Users can use it to attach on the surface of iron metal for convenient movement.

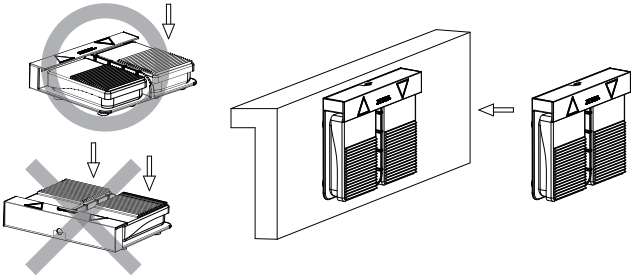

Don't stamp on two pedals simultaneously.

4.Basic Operation Guide

1. According to the axial number of actuator and the type of controller, a key box can only match with corresponding linear actuator.

Example 1: Use a two-key box when combining a linear actuator (Please refer to the figure below.).

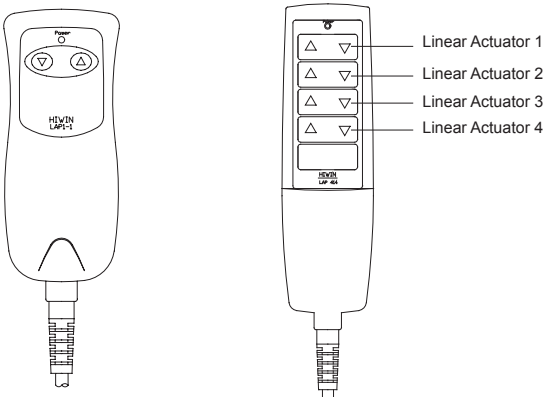

2. When you press the "△" key, the extension tube of actuator will extend outward (see a figure below).

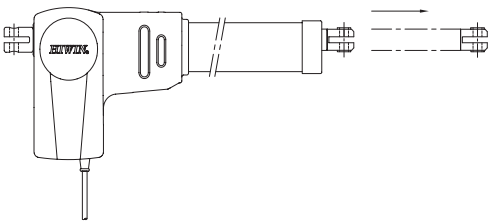

When you press the "▽" key, the extension tube of actuator will draw inward (Please refer to the figure below.).

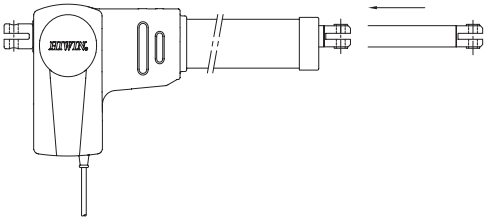

3. LAP4G use guide :

Align key with knob (Fig. 1)，to turn left enables the actuator；to turn right disables the actuator.

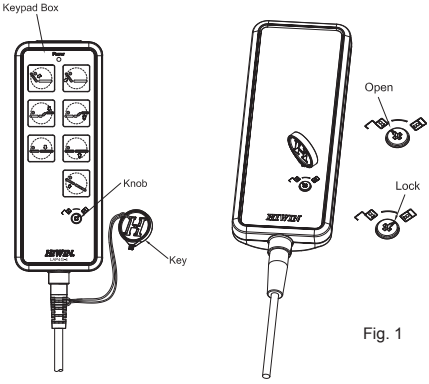

Fig. 1

Warning : Please stop turning while the key applied to the knob rotates about 45°，otherwise，the key will be damaged；the same situation in the opposite direction. Fig. 2. is a reference angle.

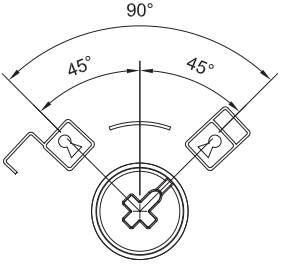

Fig. 2

4. When the extension tube travels to the end limit, the operation of an actuator will automatically stop (This function is suitable for LAS, LAS3, LAS4, LAM3, LAN1, LAN5 and LAN3 series only).
5. For LAM and LAN2 series, the operation of an actuator will stop when the extension tube travels to the external limit. (LAK2LR with a function of controlling external limit is adopted to cooperate with LAM and LAN2 series.)
6. One feature of our controller is to equip over current protector; when an actuator encounters an unknown obstacle during the operation or stops because of overload , a controller will automatically stop from the danger. If this situation repeats many times, please ensure this system is correctly installed and the load is within the regulation range. If problems still remain, please inform our agent or distributor.

5.Caution Notice:

1. Carefully read power supply indicated on the specification label of a control box before using this product. Moreover, confirm the supplied power complies with product requirement. If there is product damage or personnel injury caused by wrong supplied power, we will not take responsibility
2. Turn on the power after a controller and an actuator are installed.
3. Because there is a limit of power for transformer built in a controller, please ensure if the load exceeds the rating output power of a controller before combining with an actuator. Over rating will result in the reduction of maximum thrust and speed for an actuator as well as the temperature increase of a controller.
4. Don’t handle this product yourself if faults occur. This product can be repaired by our qualified technicians only.
5. If the leading connector of a controller is Y type and that is damaged , please contact manufacturer or product agency to replace it to avoid dangerous.

6.LAKC Over Current Protection Box

1. Specification and Operation Environment:

1.1 Suitable for LAS, LAS3, LAS4, LAM and LAN1 series.

1.2 LAKC-1 is an over current protector for uniaxial linear actuator, which can avoid over current caused by actuator overload or other abnormal situations.

1.3 Power supply: 12VDC or 24VDC; the required input power is indicated on a label of specification.

1.4 The value of over current is indicated on the specification label.

1.5 Duty cycle: 10%

1.6 Protection class: IP54 (upgrade to IP66 by demand)

1.7 Operation and environment temperature: +5℃~40℃ (41° F~104° F)

2. LAKC-1 Installation Guide:

Fix two screw holes when installing, and avoid the fall of power wire by shaking an over current protector.

3. Operation Guide:

3.1 The installation of LAKC-1 is shown in a figure below. An actuator for LAKC-1 is connected to an output connector of LAKC-1.

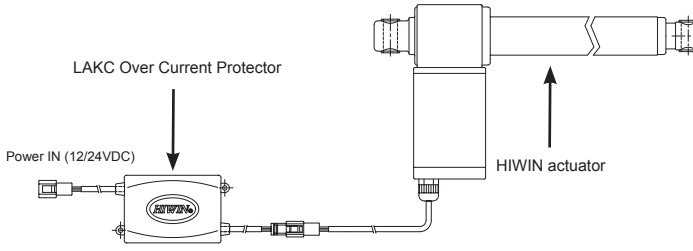

3.2 The input power (Power IN 12V/24VDC) is connected to the input connector of LAKC-1.

3.3 When the input power is connected (connecting as a figure below), the inner tube of actuator will extend outward.

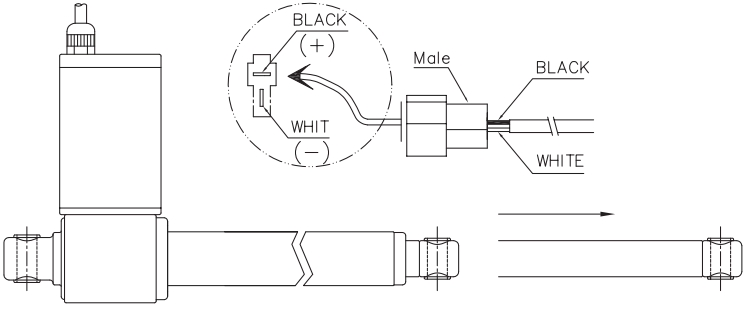

3.4 When the input power is reversely connected (wiring as a figure below), the inner tube of actuator will draw inward.

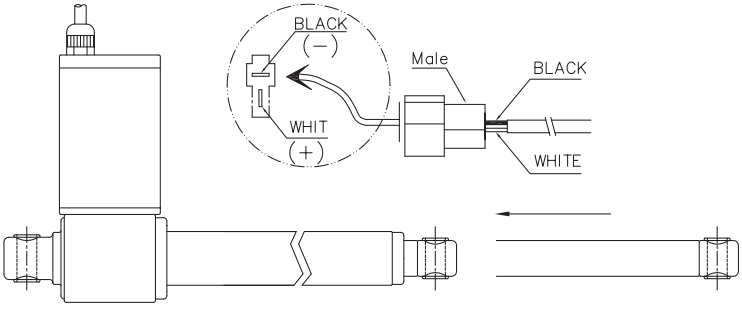

3.5 When an actuator encounters an unknown obstacle during the operation or the overload time exceeds 0.8 seconds, LAKC-1 will automatically stop.

3.6 After activating LAKC-1, it means the working current has exceeded the rating. At this time, you must disconnect the input power to reset LAKC-1.

4. Notice:

4.1 Please read a label of power supply indicated on over current protector before using this product, and ensure the supplied power can obey this product requirement.

4.2 Turn on the power after LAKC-1 over current protectors and actuators are installed.

4.3 If users select over current protector below 10A according to the product specifications, we recommend an input and output power cord within 5m with 1.25mm2 wire. If users select over current protector above 10A, we recommend input and output power cord within 5m with 2mm2 wire to reduce over current caused by large resistance in a power cord.

4.4 If users select the length of input and output power wire over 5m, we recommend a larger diameter of power cord (greater than 2mm²) be selected to reduce over current caused by large resistance.

Chapter 3 Sealed Lead Acid Batteries User's Guide

1. Battery Specification

Battery Specification (20Hr)	Nominal Voltage (V)	Dimensions (mm)			Weight (kg)	Internal Resistance (mΩ)	Max. Discharge Current (A)	Max. Charge Current (A)
		L	W	H				
1.3Ah	12	97	43	53	0.6	78	6.5	0.39
2.9Ah	12	79	56	99	1.18	30	58	0.87
4.5Ah	12	90	70	101	1.83	19	125	1.35

1. Operation Environment

1.1 Charge: 0˚C(32˚F) ~ 40˚C (104˚F)

1.2 Discharge: -15˚C(5˚F) ~ 50˚C (122˚F)

1.3 Storage: -15˚C(5˚F) ~ 40˚C (104˚F)

2. Battery Life

2.1 Standby Usage: 3~5 years (in 2.3Vpc floating charge and 25˚C)

2.2 Cycle Usage: 100% discharge: 200 cycles
80% discharge: 225 cycles
50% discharge: 500 cycles

2. Battery Power Depletion Chart

Storage Temperature/Time/Capacity Table

Time / Temperature	1 Month	2 Months	6 Months	12 Months
0˚C~5˚C(32˚ F~41˚ F)	96%	93%	90%	80%
5˚C~20˚C(41˚ F~68˚ F)	92%	90%	80%	65%
20˚C~30˚C(68˚ F~86˚ F)	90%	80%	65%	50%
30˚C~40˚C(86˚ F~104˚ F)	83%	70%	50%	No Storage

3. Battery Charging Guide

1. LAK2B、LAK2BN、LAK4N

1.1. Remove the connector covers from a battery box to insert DC IN socket indicated at the left side of LAK2B box, and then plug in power cord.

1.2. CPU in a control box will automatically detect the battery capacity. If the power capacity is insufficient, it will automatically charge. When fully charging, it will automatically disconnect charging circuit.

2. LAK2J

2.1. LAKCH-A is an accessory to connect the control box to directly charge.

2.2. Wall charger mode, the battery can be taken off from the controller to charge, the input voltage AC 100~230V, the output voltage DC 27V-1A (Plugging one side of the power cord to the socket of control box, and the other side connect to power.)

3. LAK6B

3.1. Connecting the power cord can charge immediately.

3.2. CPU in a control box will automatically detect the battery capacity. If the power capacity is insufficient, it will automatically charge. When fully charging, it will automatically disconnect charging circuit.

4. Charging method: With constant voltage 2.4~2.5v/cell, initial current is below 0.4cA to charge 5~8 hours.

5. Charging voltage: charging voltage 14.4 ~ 15.0V (at 25˚C(77˚F)) for the cycling use
floating voltage 13.5 ~ 13.8V (at 25˚C(77˚F)) for the standby use

6. Open-circuited voltage for fully charged batteries is greater than 12.5V.

4. Installation of Battery on Controller

1. LAK2B /LAK2BN Installation

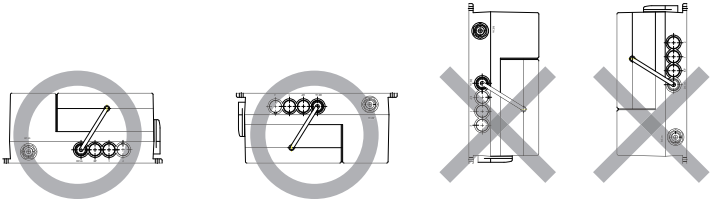

(If the vertical installation is required, please turn batteries in a box upwards to avoid short circuit.)

2. LAK6B Installation

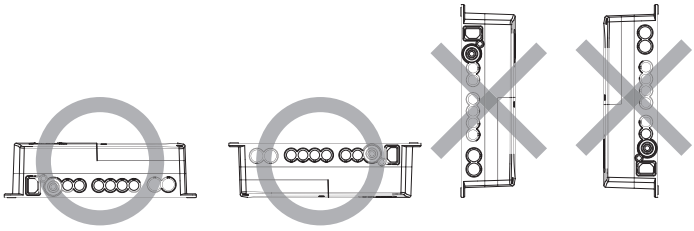

3. LAK2J Installation

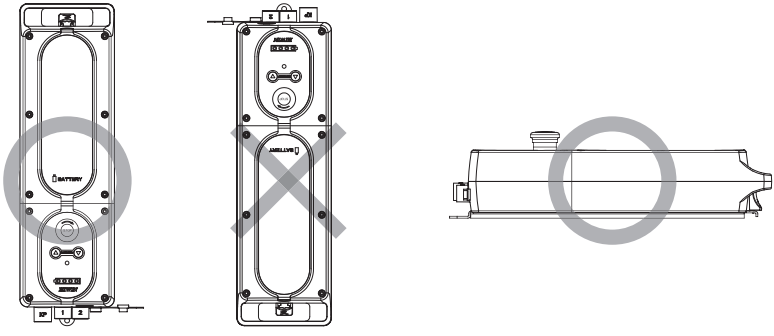

4. LAKCH-B and LAKB-3 Installation

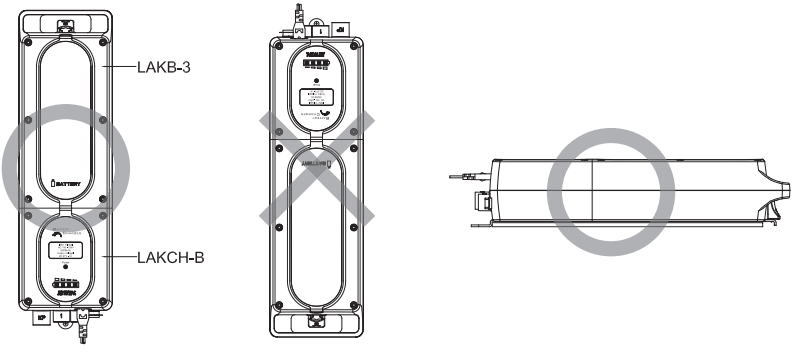

5. Battery Notice

1. Batteries will discharge in storage by itself to reduce the capacity. Therefore, they must be stored at a place around low temperature, dryness, no direct sunlight or fire.
2. During the storage period, batteries should be recharged once every 3 months (a place where the environmental temperature is below 25℃).The environmental temperature starts from 25℃ with an increase of 10℃. The recharge interval will shorten 1/2, and the speed of self discharge will increase 2 times. The battery capacity can’ t recover when long-term stored under discharge.
3. Stored batteries must be recharged before using (The first charging time needs about 5~8 hours.).
4. Batteries should be used as early as possible. First in/first out criteria had better to be followed.
5. Batteries will gradually deteriorate in storage. The battery capacity can’ t recover under the long-term storage even though recharging.
6. Avoid overcharge as far as possible, and charge soon after discharging. When battery voltage drops, the machine can’ t be driven. If there is some capacity left, batteries should be immediately charged after used. If not immediately charged, batteries will early degrade owing to lead acidification.
7. When the level of insufficient power sounds, please immediately charge batteries to avoid permanent damage.
8. LAK6B、LAK2B、LAK2BN、LAK4N batteries are designed for the outage use. Don’ t remove the power in the long term so that batteries can automatically recharge.
9. LAK2J batteries are designed for the cycling use. We recommended that LAKCH be charged to keep batteries at the best condition.
10. Disposal of the batteries: Please conform to local regulations.
11. Short circuit of battery’ s output is prohibited.

Chapter 4 LA Series Products Wiring & Installation

1. Linear Actuator Motor Wiring

Model	Power Polarity	Actuator Power Wire		
		Audio Connector	DIN 4 PIN	Bare Wire
LAM	+	WHITE	BLACK	BLACK
	-	BLACK	WHITE	WHITE
		GREEN	GREEN	
LAM3	+	WHITE	BLACK	BLACK
	-	BLACK	WHITE	WHITE
	GND	GREEN	GREEN	
LAI	+	WHITE	BLACK	BLACK
	-	BLACK	WHITE	WHITE
		GREEN	GREEN	
LAS	+	WHITE	BLACK	WHITE
	-	BLACK	WHITE	BLACK
		GREEN	GREEN	
LAS4-1	+	WHITE	BLACK	WHITE
	-	BLACK	WHITE	BLACK
		GREEN	GREEN	
LAS4-2	+	WHITE	BLACK	WHITE
	-	BLACK	WHITE	BLACK
		GREEN	GREEN	
LAC3	+	WHITE	BLACK	WHITE
	-	BLACK	WHITE	BLACK
	GND	GREEN	GREEN	GREEN

Model	Power Polarity	Actuator Power Wire		
		Audio Connector	DIN 4 PIN	Bare Wire
LAN1	+	WHITE	BLACK	BLACK
	-	BLACK	WHITE	WHITE
	GND	GREEN	GREEN	GREEN
LAN2	+	WHITE	BLACK	WHITE
	-	BLACK	WHITE	BLACK
	GND	GREEN	GREEN	GREEN
LAN3	+	WHITE	BLACK	WHITE
	-	BLACK	WHITE	BLACK
	GND	GREEN	GREEN	GREEN
LAN4	+	WHITE	BLACK	WHITE
	-	BLACK	WHITE	BLACK
	GND	GREEN	GREEN	GREEN
LAN5	+	WHITE	BLACK	BLACK
	-	BLACK	WHITE	WHITE
	GND	GREEN	GREEN	GREEN

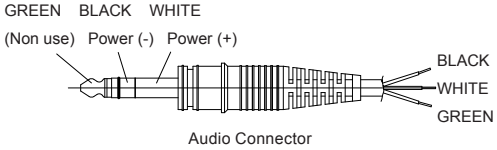

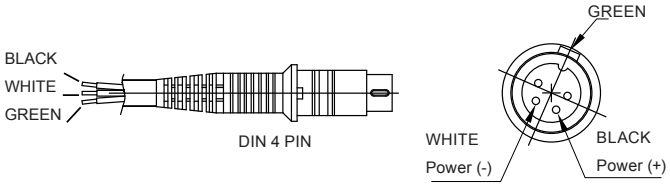

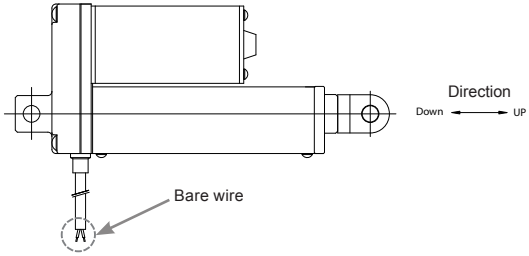

2. Reed Switch Specification & Application Circuitry:

1. Feature:

Common-open Type (standard) with red LED

No	Feature	Specification
1	Operation Voltage	AC10~110V, DC10~30V
2	Operating temperature	-10˚C~60˚C
3	Storage Temperature	-20˚C~70˚C
4	Operation Current	10~30mA
5	ON Resistance	51Ω
6	Protection Class	IP66
7	Response Time	3.2KHz
8	Signal Wire	Φ3.8, 2C

Common-close Type (optional)

No	Feature	Specification
1	Operation Voltage	DC100V(Max)
2	Operating temperature	-10˚C~60˚C
3	Storage Temperature	-20˚C~70˚C
4	Operation Current	150mA(Max.)
5	ON Resistance	250mΩ
6	Protection Class	IP66
7	Response Time	2.4KHz
8	Signal Wire	Φ3.8, 2C

2. Circuit Diagram:

Common-open Type

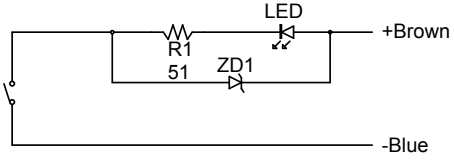

Common-close Type

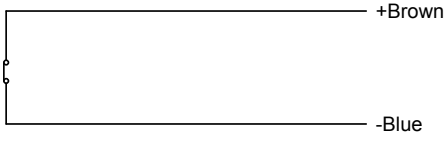

3. PLC Example:

1. Low-level Control (taking PLC for example)

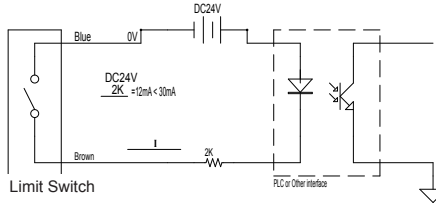

2. High-level Control (taking PLC for example)

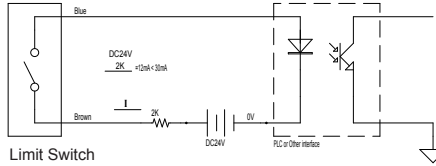

3. Audio connector and wire for LA actuator read switch

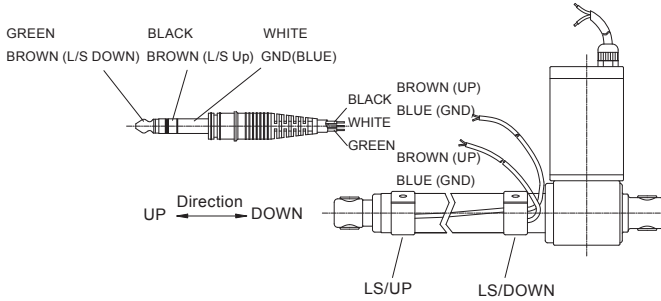

4. Positioning feedback device wiring

Positioning feedback device wiring can be classified as 5-core bare wire and 4-pin connector described as follows:

1. LAS3 Optical Sensor and Potentiometer Feedback

1.1 Bare Wire for Optical Sensor

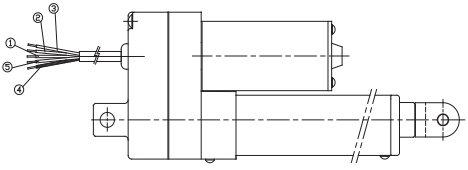

WIRING	COLOR	SIGNAL
1	BLUE (22AWG)	GND
2	YELLOW (22AWG)	OUTPUT
3	RED (22AWG)	24/12VDC
4	BLACK (20AWG)	MOTOR(-)
5	WHITE (20AWG)	MOTOR(+)

1.2 4-pin Connector for Optical Sensor

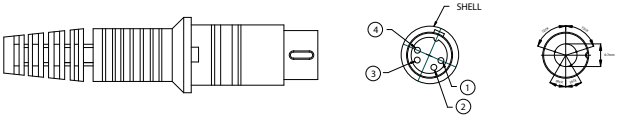

WIRING	COLOR	SIGNAL
1	YELLOW	OUTPUT
2	BLACK	MOTOR(+)
3	WHITE	MOTOR(-)
4	RED	24/12VDC
SHELL	BLUE	GND

1.3 Specification of Positioning Feedback (Optical sensor)

Supply voltage	24VDC	12DC	5VDC
Output	Hight level 24VDC Low level 0.2V/40mA PNP PS.Open collector (NPN)	Hight level 12VDC Low level 0.2V/40mA PNP PS.Open collector (NPN)	TTL

1.4 Bare Wire for Potentiometer

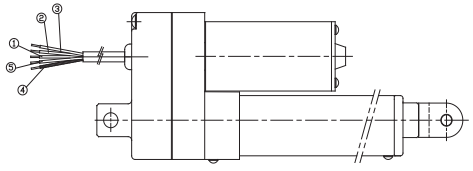

WIRING	COLOR	SIGNAL
1	BLUE (AWG 20)	GND
2	YELLOW (AWG 20)	OUTPUT
3	RED (AWG 20)	24/12VDC
4	BLACK (AWG 20)	MOTOR(-)
5	WHITE (AWG 20)	MOTOR(+)

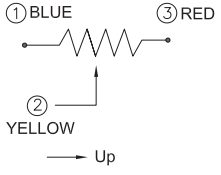

1.5 4-pin Connector for Potentiometer

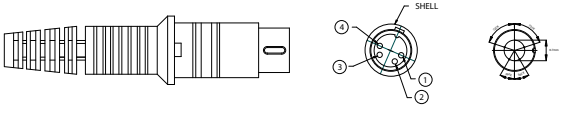

WIRING	COLOR	SIGNAL
1	YELLOW	OUTPUT
2	BLACK	MOTOR(+)
3	WHITE	MOTOR(-)
4	RED	24/12VDC
SHELL	BLUE	GND

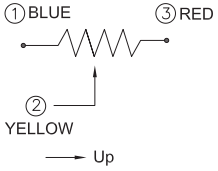

2. LAN1 Positioning Feedback (Hall Sensor)

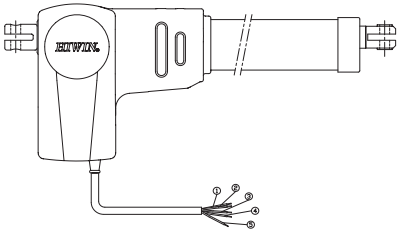

WIRING	COLOR	SIGNAL
1	BLACK (AWG18)	MOTOR(+)
2	WHITE (AWG18)	MOTOR(-)
3	GREEN (AWG24)	GND
4	RED (AWG24)	24/12VDC
5	YELLOW (AWG24)	OUTPUT

Specification of Positioning Feedback (Hall sensor)

Supply voltage	24VDC	12DC	5VDC
Output	High level 24VDC Low level 0.2V/10mA Sink (NPN)	High level 12VDC Low level 0.2V/10mA Sink (NPN)	TTL

4-pin DIN Connector

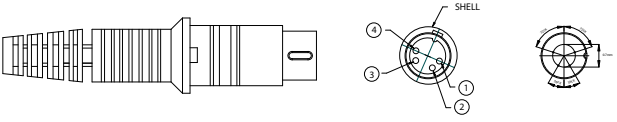

WIRING	COLOR	REMARK
1	YELLOW	OUTPUT
2	BLACK	MOTOR(+)
3	WHITE	MOTOR(-)
4	RED	VCC
SHELL	GREEN	GND

3. LAN2 Positioning Feedback (Hall Sensor)

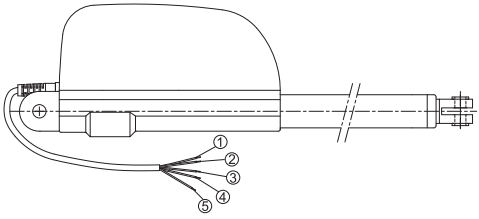

WIRING	COLOR	SIGNAL
1	RED (AWG24)	24VDC
2	YELLOW (AWG24)	OUTPUT
3	GREEN (AWG24)	GND
4	WHITE (AWG20)	MOTOR(+)
5	BLACK (AWG20)	MOTOR(-)

Specification of Positioning Feedback (Hall sensor)

Specification	24VDC	5VDC
Output	Hight level 24VDC Low level 0.2V/10mA Sink (NPN)	TTL

4-pin Connector

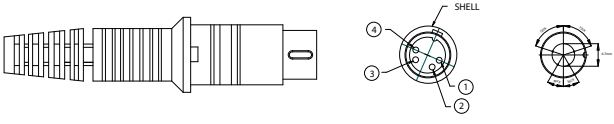

WIRING	COLOR	REMARK
1	YELLOW	OUTPUT
2	BLACK	MOTOR(+)
3	WHITE	MOTOR(-)
4	RED	24VDC
SHELL	GREEN	GND

4. Positioning Feedback for LAN3 Potentiometer

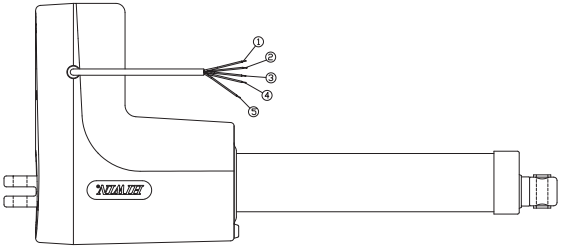

WIRING	COLOR	REMARK
1	WHITE (AWG18)	MOTOR(+)
2	BLACK (AWG18)	MOTOR(-)
3	YELLOW (AWG24)	OUTPUT
4	RED (AWG24)	24VDC
SHELL	GREEN (AWG24)	GND

4-pin Connector for Potentiometer

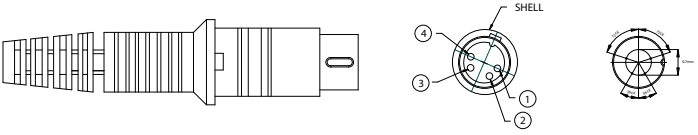

WIRING	COLOR	REMARK
1	YELLOW	OUTPUT
2	BLACK	MOTOR(+)
3	WHITE	MOTOR(-)
4	RED	24VDC
SHELL	GREEN	GND

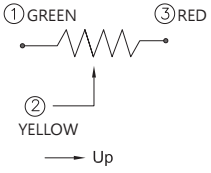

5. LAN5 Positioning Feedback (Hall Sensor)

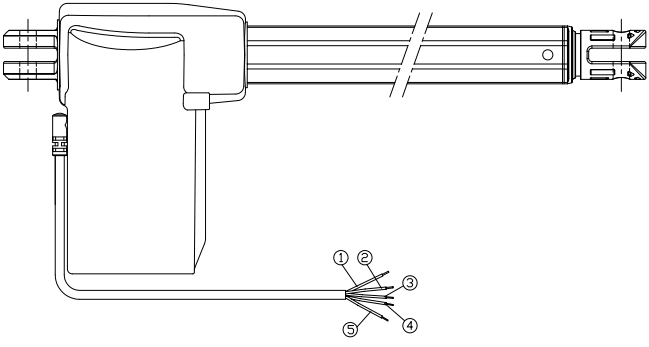

WIRING	COLOR	REMARK
1	WHITE (AWG18)	MOTOR(-)
2	YELLOW (AWG24)	OUTPUT
3	GREEN (AWG24)	GND
4	RED (AWG24)	24/12VDC
5	BLACK (AWG18)	MOTOR(+)

Specification of Positioning Feedback (Hall sensor)

Supply voltage	24VDC	12DC	5VDC
Output	Hight level 24VDC Low level 0.2V/10mA Sink (NPN)	Hight level 12VDC Low level 0.2V/10mA Sink (NPN)	TTL

4-pin Connector

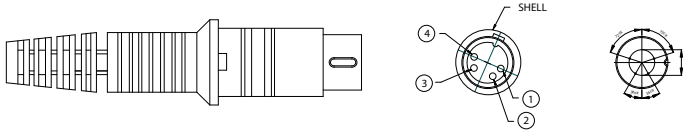

WIRING	COLOR	REMARK
1	YELLOW	OUTPUT
2	BLACK	MOTOR(+)
3	WHITE	MOTOR(-)
4	RED	24/12VDC
SHELL	GREEN	GND

6. Positioning Feedback for LAC3 Potentiometer

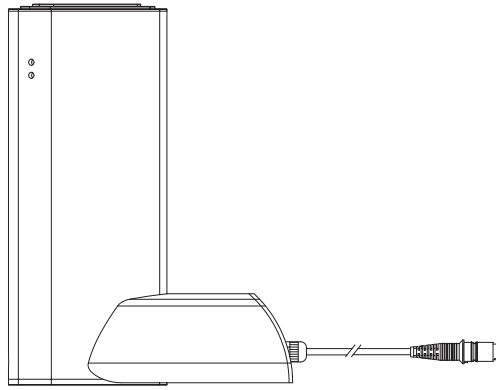

4-pin Connector for Potentiometer

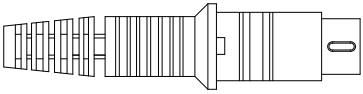

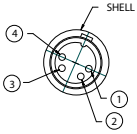

WIRING	COLOR	REMARK
1	YELLOW	OUTPUT
2	BLACK	MOTOR(+)
3	WHITE	MOTOR(-)
4	RED	24VDC
5	GREEN	GND

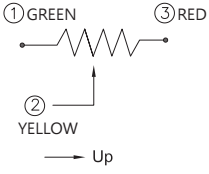

Chapter 5 LAK\LAP Wiring and Installation:

1. LAP1/LAP2 Wiring

1. LAP1/LAP2 for LAK2/LAK2D Circuit Diagram

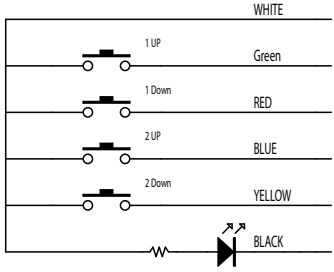

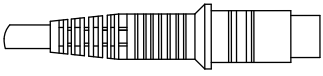

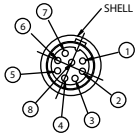

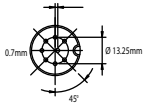

Wiring Specification

DIN connector	WIRING	LAK2/LAK2D	Specification
1	WHITE	DC_12V	220mA
2	BLACK	GND	50mA
3	NO used	NO used	--
4	NO used	NO used	--
5	GREEN	Axis 1 UP	50mA
6	BLUE	Axis 2 UP	50mA
7	YELLOW	Axis 2 DOWN	50mA
8	RED	Axis 1 DOWN	50mA
9	SHELL	NO used	--

2 LAP1/LAP2 for LAK4&LAK2LR Circuit Diagram

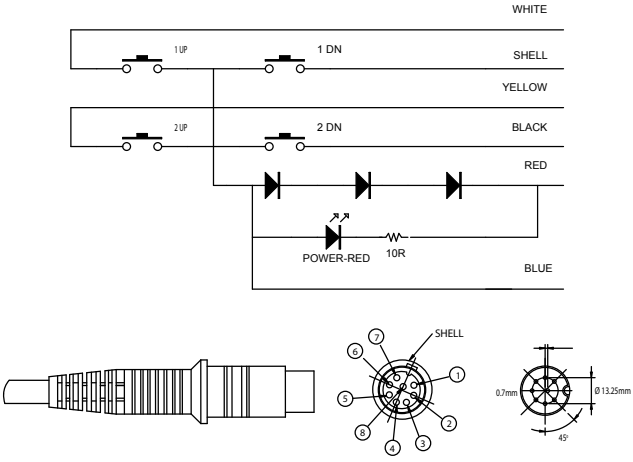

Wiring Specification

DIN Connector	WIRING	LAK4 & LAK2LR	Specification
1	WHITE	Axis 1 UP	50mA
2	BLACK	Axis 2 DOWN	50mA
3	YELLOW	Axis 2 UP	50mA
4	NO used	NO used	--
5	NO used	NO used	--
6	BLUE	NO used	--
7	NO used	NO used	--
8	RED	GND	--
9	SHELL	Axis 1 DOWN	50mA

2.LAP3 Wiring

2.1. For LAK2B

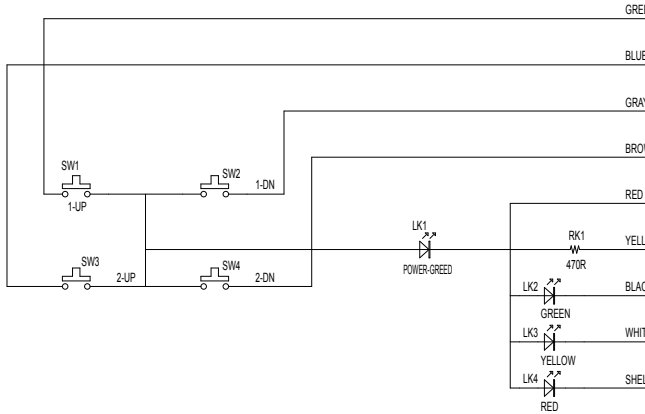

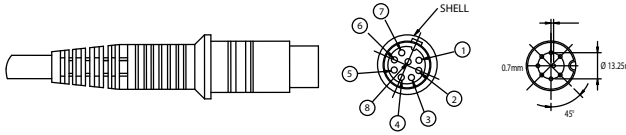

Wiring Specification

DIN connector	WIRING	LAK2B	Specification
1	RED	DC_12V	220mA
2	YELLOW	GND	--
3	BLACK	LED-Green	10mA
4	WHITE	LED-Yellow	10mA
5	GREEN	Axis 1 UP	50mA
6	BLUE	Axis 2 UP	50mA
7	BROWN	Axis 2 DOWN	50mA
8	GRAY	Axis 1 DOWN	50mA
9	SHELL	LED-Red	10mA

2.2. For LAK2J

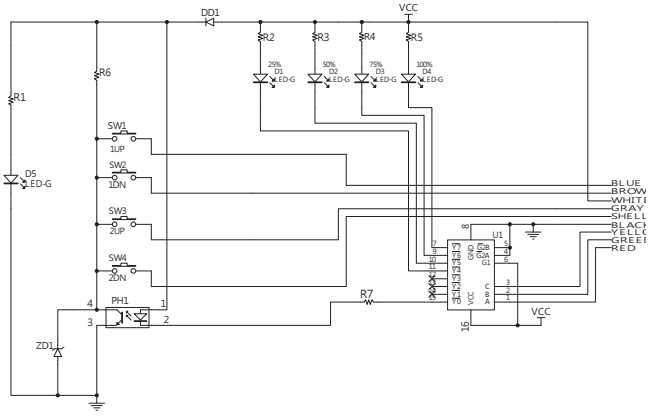

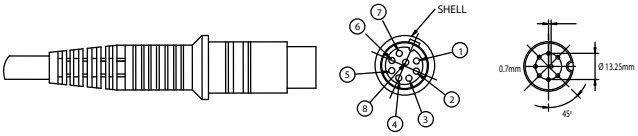

Wiring Specification

DIN connector	WIRING	LAK2J	Specification
1	GRAY	Axis 2 UP	50mA
2	BLACK	GND	--
3	WHITE	VCC	220mA
4	YELLOW	Address C	50mA
5	GREEN	Address B	50mA
6	BLUE	Axis 1 UP	50mA
7	BROWN	Axis 1 DOWN	50mA
8	RED	Address A	50mA
9	SHELL	Axis 2 DOWN	50mA

3. LAP3N Wiring

For LAK2BN

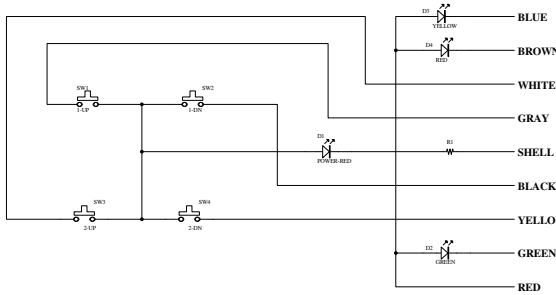

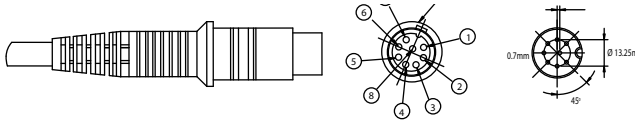

Wiring Specification

DIN connector	WIRING	LAK2BN	Specification
1	GRAY	1UP	220mA
2	BLACK	1DN	--
3	WHITE	2UP	10mA
4	YELLOW	2DN	10mA
5	GREEN	LED_GREEN	50mA
6	BLUE	LED_YELLOW	50mA
7	BROWN	LED_RED	50mA
8	RED	DC_24V	50mA
9	SHELL	GND	10mA

4. LAP4/LAP4M/LAP4R Wiring

For LAK4

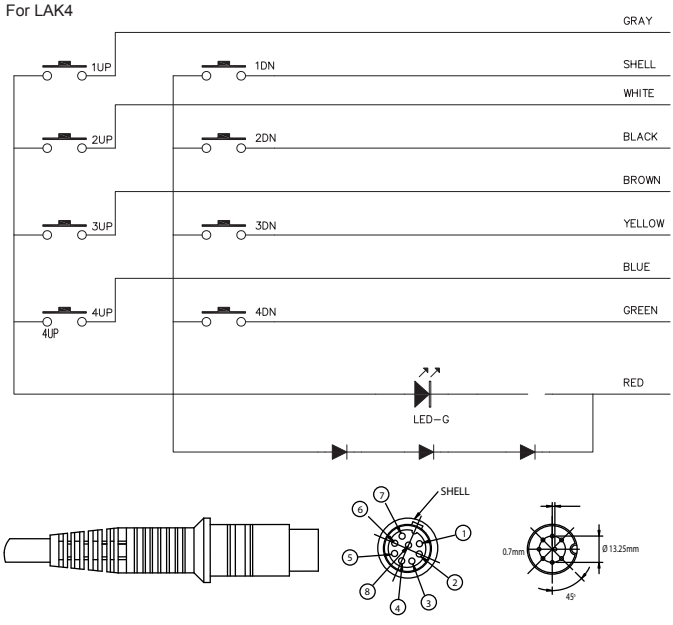

Wiring Specification

DIN Connector	WIRING	LAK4	Specification
1	GRAY	Axis 1 UP	50mA
2	BLACK	Axis 2 DOWN	50mA
3	WHITE	Axis 2 UP	50mA
4	YELLOW	Axis 3 DOWN	50mA
5	GREEN	Axis 4 DOWN	50mA
6	BLUE	Axis 4 UP	50mA
7	BROWN	Axis 3 UP	50mA
8	RED	GND	--
9	SHELL	Axis 1 DOWN	50mA

5. LAP4G Wiring

For LAK4D & LAK4N

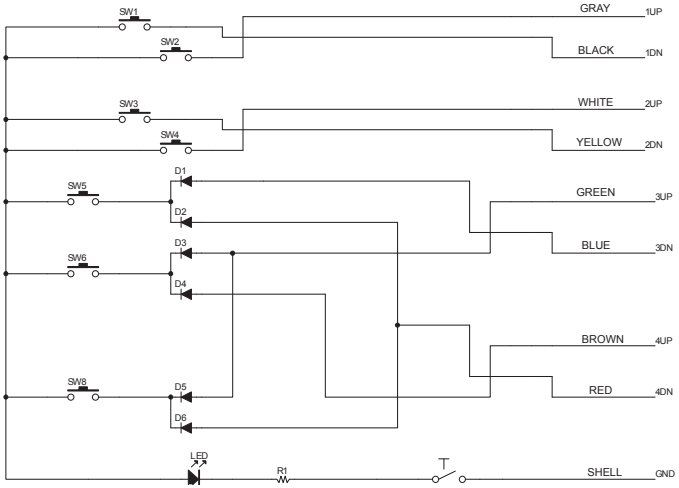

Wiring Specification

DIN connector	WIRING	LAK4D
1	GRAY	Axis 1UP
2	BLACK	Axis 1 DOWN
3	WHITE	Axis 2UP
4	YELLOW	Axis 2 DOWN
5	GREEN	Axis 3UP
6	BLUE	Axis 3 DOWN
7	BROWN	Axis 4UP
8	RED	Axis 4 DOWN
9	SHELL	GND

6. LAP4N/LAP4M/LAP4R Wiring

For LAK4D & LAK4N

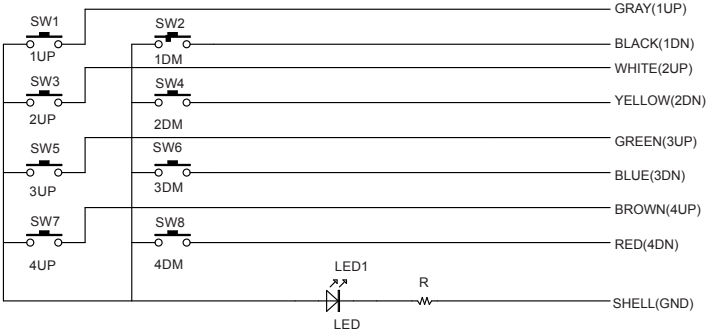

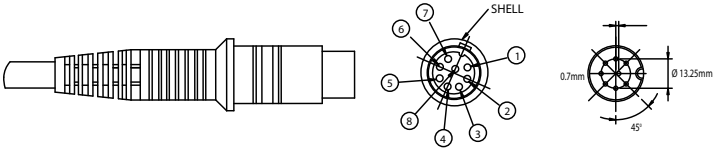

Wiring Specification

DIN connector	WIRING	LAK4N & LAK4D
1	GRAY	Axis 1UP
2	BLACK	Axis 1 DOWN
3	WHITE	Axis 2UP
4	YELLOW	Axis 2 DOWN
5	GREEN	Axis 3UP
6	BLUE	Axis 3 DOWN
7	BROWN	Axis 4UP
8	RED	Axis 4 DOWN
9	SHELL	GND

7. LAP5 Wiring

7.1. For LAK6B

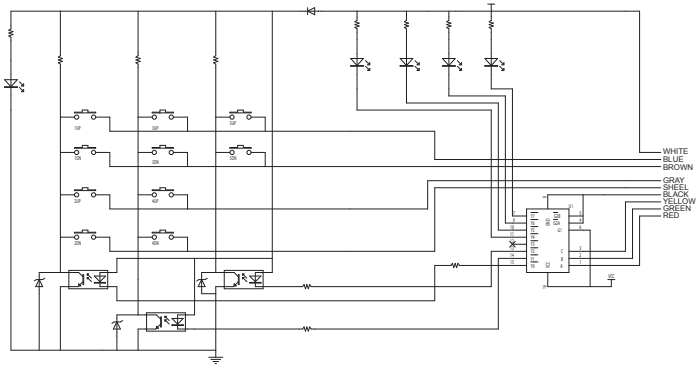

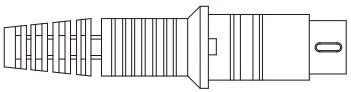

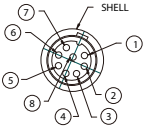

Wiring Specification

DIN Connector	WIRING	LAK6B	Specification
1	GRAY	Axis 2,4 UP	50mA
2	BLACK	GND	--
3	WHITE	VCC	220mA
4	YELLOW	Address C	50mA
5	GREEN	Address B	50mA
6	BLUE	Axis 1,3,5 UP	50mA
7	BROWN	Axis 1,3,5 DOWN	50mA
8	RED	Address A	50mA
9	SHELL	Axis 2,4 DOWN	50mA

7.2. For LAK2J

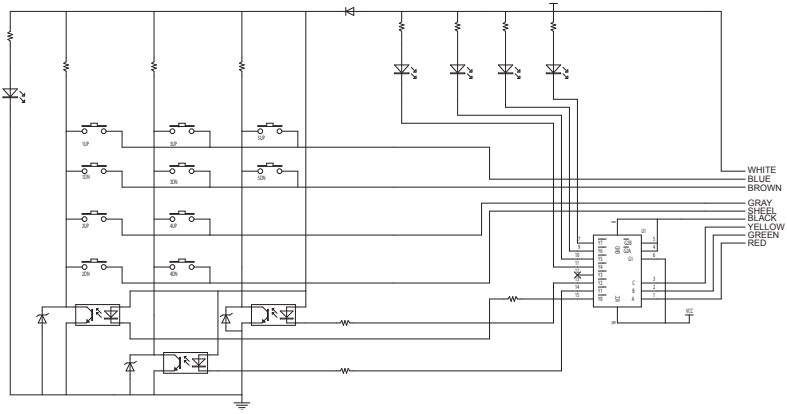

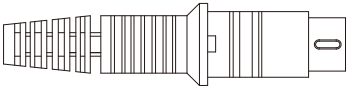

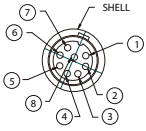

Wiring Specification

DIN Connector	WIRING	LAK2J	Specification
1	GRAY	Axis 2 UP	50mA
2	BLACK	GND	--
3	WHITE	VCC	220mA
4	YELLOW	Address C	50mA
5	GREEN	Address B	50mA
6	BLUE	Axis 1 UP	50mA
7	BROWN	Axis 1 DOWN	50mA
8	RED	Address A	50mA
9	SHELL	Axis 2 DOWN	50mA

True Table

C	B	A	Y0	Y1	Y2	Y3	Y4	Y5	Y6	Y7	Description
0	0	0	0	1	1	1	1	1	1	1	Axis 1,2 Control Enable
0	0	1	1	0	1	1	1	1	1	1	Axis 3,4 Control Enable
0	1	0	1	1	0	1	1	1	1	1	Axis 5 Control Enable
0	1	1	1	1	1	0	1	1	1	1	No Used
1	0	0	1	1	1	1	0	1	1	1	Charge 25 % LED ON
1	0	1	1	1	1	1	1	0	1	1	Charge 50 % LED ON
1	1	0	1	1	1	1	1	1	0	1	Charge 75 % LED ON
1	1	1	1	1	1	1	1	1	1	0	Charge 100 % LED ON

8. Connector Drawings

1. LAK2/LAK2LR/LAK2D/LAK2B/LAK2BN/LAK2J/LAK4/LAK4N/LAK4D/LAK6B KEYPAD DIN drawings

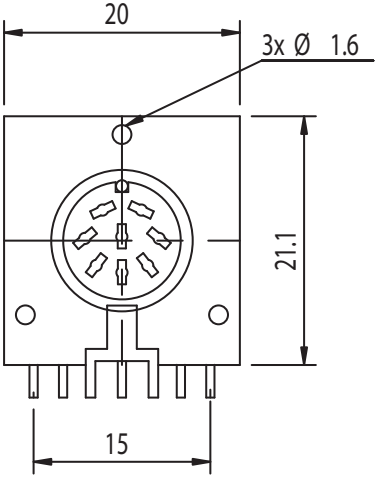

2. LAK2D/LAK2B/LAK2BN/LAK4/LAK4N/LAK4D/LAK6B Motor DIN drawings

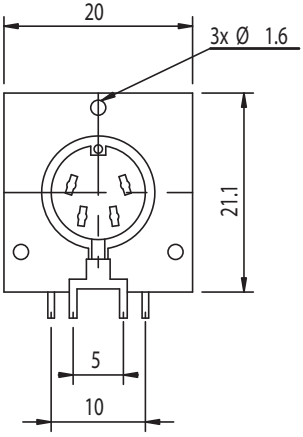

Chapter 6 Appendix

1. Label Description

Controller	Linear Actuator
	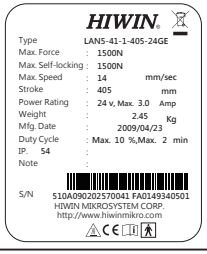

1. : The product is qualified by CE.

2. : The protective rank of anti-shock of this product is B.

3. : A double protection of this product.

4. : High temperature.

5. : Be sure to read specification before using the product.

6. : The protective rank of anti-shock of this product is BF.

7. : The product is qualified by UL certificate and CSA certificate.

8. : The symbol of the crossed out wheeled bin indicates that the product (electrical and electronic equipment) should not be placed in municipal waste. Please check local regulations for disposal of electronic products.

2. IP rank Description

IP(INTERNATIONAL PROTECTION) CODES

I P X X

Degree of protection against water,effects of immersion in water.

Degree of protection against solid foreign object

IP	X	X	Descriptions
IP	0	X	Not Protected (Dust)
	1	X	Protected against solid foreign objects of 50mm diameter and greater
	2	X	Protected against solid foreign objects of 12mm diameter and greater
	3	X	Protected against solid foreign objects of 2.5mm diameter and greater
	4	X	Protected against solid foreign objects of 1mm diameter and greater
	5	X	Dust protected
	6	X	Dust tight
	X	0	Not Protected
IP	X	1	Protected against vertically falling water drops.
	X	2	Protected against vertically falling water drops when enclosure is toted up to75.
	X	3	Protected against spraying water.
	X	4	Protected against splashing water .
	X	5	Protected against water jets.
	X	6	Protected against powerful water jets.
	X	7	Protected against the effects of temporary immersion in water
	X	8	Protected against the effect of continuous immersion in water

EXAMPLE：IP20、IP54、IP66。

Chapter 7 Product use in Medical Bed

1. Special features

	Controller	Handset
Type	LAK4D-DDDD-230-GE	LAP4G-4-GE
Controller power（Vin）	AC 230 V	--
Controller power（Vout）	DC 24 V	--
IP	54	54
Duty Cycle	10%（Max. 2 min On）	--
Protection Class	Class II	

	Actuator		
Type	LAN5-41-1-405-24GE	LAN5-21-1-60-24GE	LAN5-21-1-110-24GE
Max. Force	3000N（Motor = 3500 rpm）	6000N	6000N
Max. Self-locking	3400N	6000N	6000N
Max. speed	9.5mm/s（Load = 0）	4.5mm/s（Load = 0）	4.5mm/s（Load = 0）
Stroke	405mm	60mm	110mm
Power Rating	24V，Max. 4 Amp	24V，Max. 4 Amp	24V，Max. 4 Amp
IP	54	54	54
Duty Cycle	10%（Max. 2 min On）	10%（Max. 2 min On）	10%（Max. 2 min On）
Function of the medical bed	Adjust the bed surface horizontal height	（1）Adjust the back. （2）Adjust the leg. （3）Adjust the surface horizontal gradient.	（1）Adjust the back. （2）Adjust the leg. （3）Adjust the surface horizontal gradient

※Use for medical beds with safety working load of 2000 N.

※The normal life time of hospital bad in operation equipment estimated five to ten years.
(The hospital bad be used five times per day)

◎ Operating temperature: +5° C ~ +40° C (+41° F ~ +104° F).

◎ Type of protection of applied parts against electric shock is BF.

◎ The temperature of Products under storage and transmission is: -10°C~+50°C.

◎ This product can not be used in chemical burdened environment.

◎ This product can not be used in environment of hyper electromagnetic wave and hyper electromagnetic field.

◎ Maximum weighted sound power level: 52 dB(A)

◎ If the LAN5(Quick Release Function) is damaged before installing or using. Please turning power off first and immediately contact us or agent of HIWINMIKRO.

◎ If LAN5 (Quick Release Function) used with hospital bad, have to make sure wire placed location. The wire does not placed aside, in order to avoid end user and prevent touch mistake injured …etc.

APPLIED STANDARDS AND GUIDELINES

standard	specify
EN 55014-1：2006	Electromagnetic compatibility - Requirements for household appliances, electric tools and similar apparatus - Part 1: Emission (IEC/CISPR 14-1:2005); German version EN 55014-1:2006
EN 55014-2：1997+A1：2001	Electromagnetic compatibility-Requirements for household appliances, electric tools and similar apparatus-Part 2:Immunity-Product family standard.
EN 60601-1-2：2007	Electromagnetic tolerances
EN 610003-2：2006	Industrial-process control systems - Instruments with analogue inputs and two- or multi state outputs - Part 2: Guidance for inspection and routine testing.
EN 60601-1：2006	Medical electrical equipment – Part 1 General requirements for basic safety and essential performance
prEN 60601-2-52：2007	Medical electrical equipment -- Part 2-52: Particular requirements for basic safety and essential performance of medical beds
DIN EN 60601-2-38：2001	Safety of electrically operated hospital beds
DIN EN1970：2005	Adjustable beds for disabled persons

2.LAN5 and LAK4D Installation

Step 1：

Align a bolt on LAK4D controller with a notch on LAN5 to insert downward(Fig. 1).

There is a tube-bolt circled in the fig.2 to fix an actuator and controller.

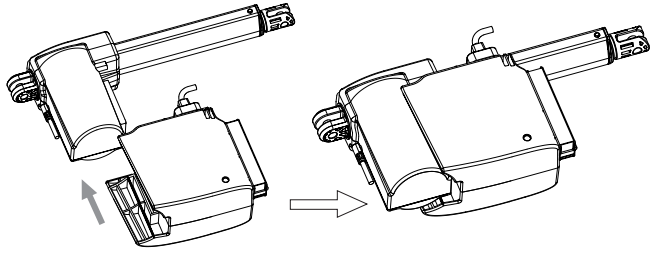

Fig. 1

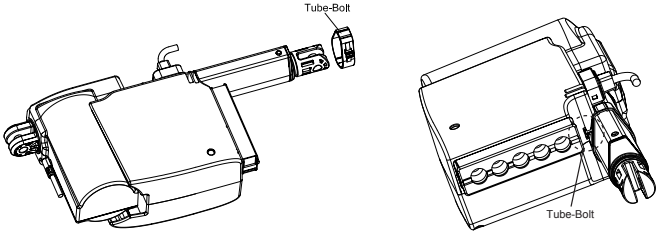

Fig. 2

Step 2：(Release of LAK4D Fixer)

a.Putting the plug of Handset in the socket of Controller（The housing is made ”KP”）and Putting the plug of Actuator in the socket of Controller（The socket is made ”1~4”）。

b.After inserting connectors of an actuator and a key box，vertically insert back the fixer on LAK4D controller (A) , and then fasten the up fixer and down fixer on LAK4D controller (Fig. 3). Before inserting the main power cord，rotate out the locker (B) along the arrow direction to insert power cord (Fig. 3) and then pull it back (Fig. 3) along the arrow direction.

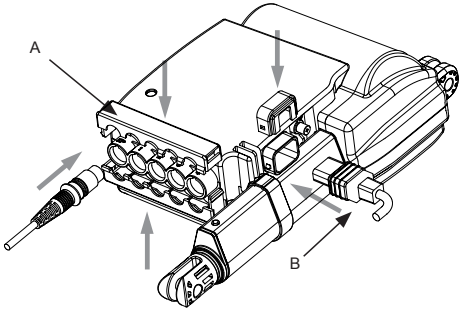

Fig.3

Step 3：（Release of LAK4D Fixer）

One side of the fixer can be released (Fig. 5) by strongly pressing both sides of the fixer on LAK4D controller (Fig. 4).

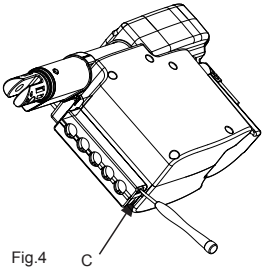

Fig.4

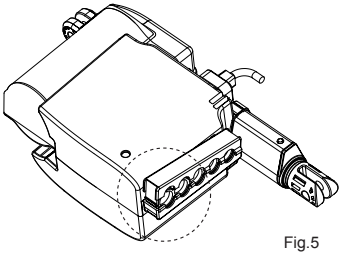

Fig.5

Step 4:

Using a screwdriver to prize the bottom of power cord fixer on LAK4D controller (Fig. 6).

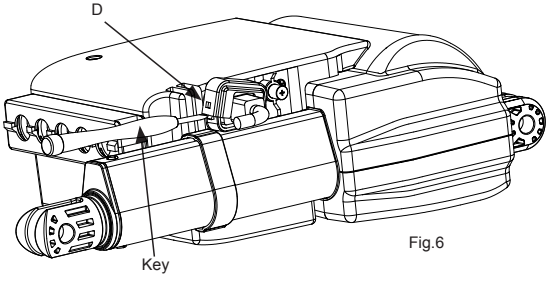

Fig.6

3.Handset Description

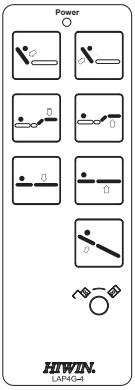

（1）Operate the Handset：

Adjust the back：Push this button if you want to adjust the back angle.	
Function：Adjust the back angle. (Down)	Function：Adjust the back angle.（Up）
Adjust the leg：Push this button if you want to adjust the leg angle.	
Function：Adjust the back angle. (Down)	Function：Adjust the back angle.（Up）
Adjust the surface horizontal height：Push this button if you want to adjust the height of the surface horizontal.	
Function：Adjust the surface horizontal height.（Down）	Function：Adjust the surface horizontal height.（Up）
Adjust the surface horizontal gradient：Push this button if you want to adjust the gradient of the surface horizontal.	
Function：Adjust the surface horizontal gradient.	

（2）Locking Function：

The key is an accessory to a LAP4G and that for lock function. （Fig. 1）

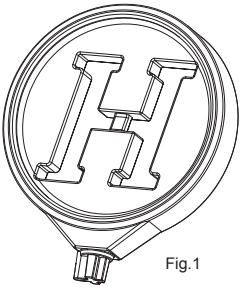

Fig.1

Align key with knob (Fig. 2)，to turn left enables the actuator：to turn right disables the actuator.

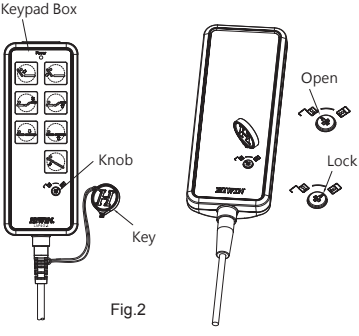

Fig.2

Please stop turning while the key applied to the knob rotates about 45˚ ，otherwise，the key will be damaged：the same situation in the opposite direction. Fig. 3. is a reference angle.

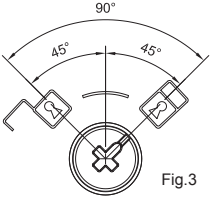

Fig.3

Warning ：Only the operator is authorized to use the locking function.

4.Cleaning and disinfecting

Cleaning and disinfecting：

（1）Clean all surfaces（medical bed）

（2）If the bed has visible contamination, it must be disinfected by wiping after cleaning. Use approved disinfectants for each surface according to the products listed by the DGHM (German Organization for Hygiene and Microbiology).

5.Checklist of product

Check of product		Defect description
Visual check of electrical components	☐Cable (Damage) ☐Power cord (Damage)	
Visual check of mechanical components	☐Controller (Damage, Deformation) ☐Actuator (Damage, Deformation) ☐Handset (Damage, Deformation) ☐Accessories ☐ Tube-bolt (Damage, Deformation) ☐ Cord-bolt (Damage, Deformation) ☐ Bolt (Damage, Deformation) ☐ Key (Damage, Deformation)	
Function test of electrical components	☐Handset (Blocking function) ☐Function lock of Handset (Blocking function) ☐Actuator (Free move) ☐LED (controller) (Light)	
Signature of the checker：	Result of the check：	Date ：

※If excrescent occurrence after check step by step, promptly communicated with supplier.

6. Label

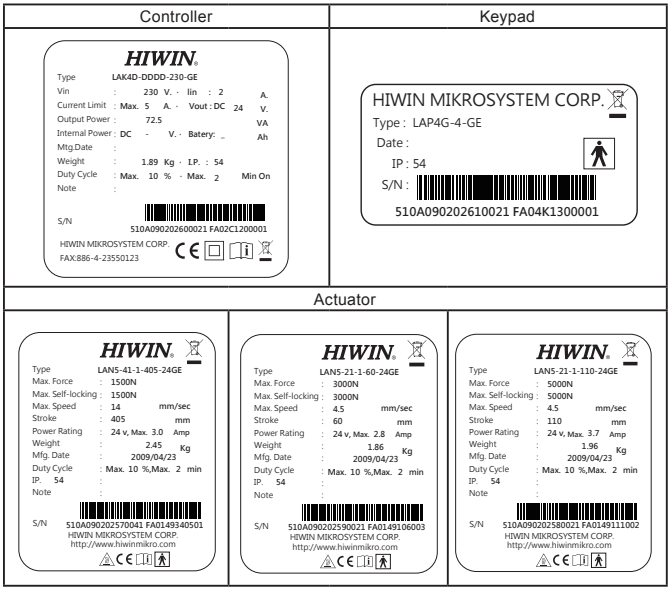
Controller
Keypad
HIWIN®
Type LAK4D-DDDD-230-GE
Vin : 230 V. · Iin : 2 A.
Current Limit : Max. 5 A. · Vout : DC 24 V.
Output Power : 72.5 VA
Internal Power : DC - V. · Batery: _ Ah
Mfg.Date :
Weight : 1.89 Kg · I.P. : 54
Duty Cycle : Max. 10 % · Max. 2 Min On
Note :
S/N
510A090202600021 FA02C1200001
HIWIN MIKROSYSTEM CORP.
FAX:886-4-23550123
HIWIN MIKROSYSTEM CORP.
Type : LAP4G-4-GE
Date :
IP : 54
S/N :
510A090202610021 FA04K1300001
Actuator
HIWIN®
Type LAN5-41-1-405-24GE
Max. Force : 1500N
Max. Self-locking : 1500N
Max. Speed : 14 mm/sec
Stroke : 405 mm
Power Rating : 24 v, Max. 3.0 Amp
Weight : 2.45 Kg
Mfg. Date : 2009/04/23
Duty Cycle : Max. 10 %,Max. 2 min
IP. 54
Note
S/N
510A090202570041 FA0149340501
HIWIN MIKROSYSTEM CORP.
http://www.hiwinmikro.com
HIWIN®
Type LAN5-21-1-60-24GE
Max. Force : 3000N
Max. Self-locking : 3000N
Max. Speed : 4.5 mm/sec
Stroke : 60 mm
Power Rating : 24 v, Max. 2.8 Amp
Weight : 1.86 Kg
Mfg. Date : 2009/04/23
Duty Cycle : Max. 10 %,Max. 2 min
IP. 54
Note
S/N
510A090202590021 FA0149106003
HIWIN MIKROSYSTEM CORP.
http://www.hiwinmikro.com
HIWIN®
Type LAN5-21-1-110-24GE
Max. Force : 5000N
Max. Self-locking : 5000N
Max. Speed : 4.5 mm/sec
Stroke : 110 mm
Power Rating : 24 v, Max. 3.7 Amp
Weight : 1.96 Kg
Mfg. Date : 2009/04/23
Duty Cycle : Max. 10 %,Max. 2 min
IP. 54
Note
S/N
510A090202580021 FA0149111002
HIWIN MIKROSYSTEM CORP.
http://www.hiwinmikro.com

MEMO

MEMO

MEMO